BIS Stainless Steel Fixpoint Console FPC 'Medium'

(M 19 02)

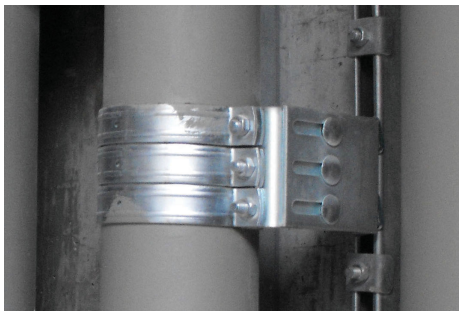

Características y ventajas

- flexible use console module for high forces (depending on the situation, detailed design by technical service)
- can be used as a pipe connection point in conjunction with 2 or 3 heavy-duty clamps type Stainless Steel Heavy Duty Clamps and Stainless Steel Heavy Duty Clamps with Lining
- pares de apriete de 75Nm para los tornillos de fijación de la consola
- material: metal parts made of stainless steel 1.4404 (A4) - EN 10088, AISI 316L; bolts, nuts, washers made of stainless steel 1.4401 (A4) - EN 10088, AISI 316

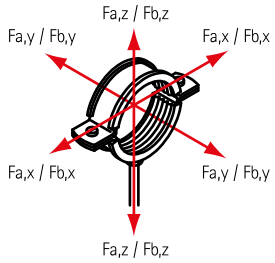

Pieza Nº	L	B (mm)	H (mm)	h (mm)	d1 (mm)	d2 (mm)	k (mm)	k1 (mm)	$F_{a,z}$ (N)	$F_{a,y}$ (N)	$F_{a,x}$ (N)	U.m.v. 1	
6697206	80 mm	136	153 - 268	150	15 x 11	Ø 13,0	100	90	14.300	11.500	3.200	2	*
** Depending on the situation, please contact Walraven Technical Support for advice on safe loads. Nota: las abrazaderas y la consola deben ser solicitadas por separado.*													

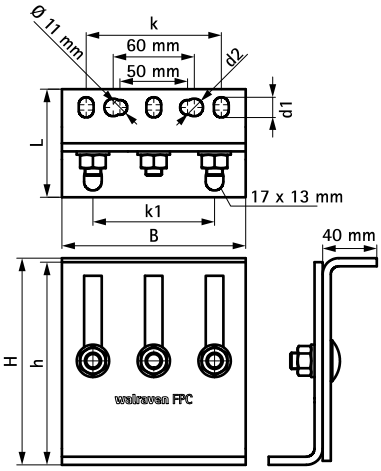

Complementarios

BIS Bifix® 300 acero inox
BIS Bifix® 1301 acero inox
Stainless Steel Heavy Duty Clamp with Lining

Complementarios

Stainless Steel Heavy Duty Clamp
WTB1 Anclaje macho