Walraven RapidRail® Wall Plate

(G 15 05)

fixing to wall

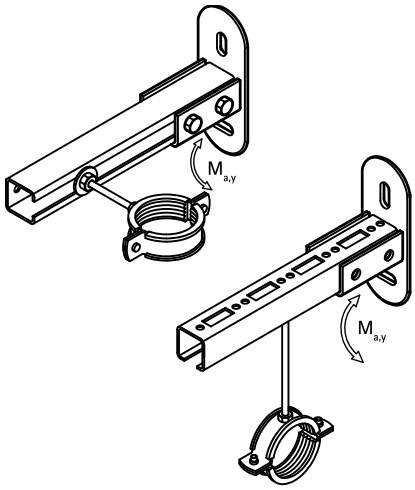

Features and benefits

- flexible base plate for rails
- for floor or wall mounting
- rail can be fixed with slot downwards or sideways
- Part No. 6613200: suitable for 30x20
- slots at 90° to each other to simplify fixing
- CO_2 welded
- with pre-assembled BIS RapidRail® Sliding nut(s) for a quick fixing, and retains assembly in place before final tightening
- material: metal parts made of steel 1.0332; spring(s) made of POM (polyoxymethylene), green
- zinc plated
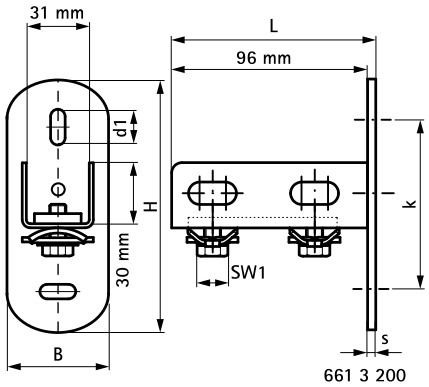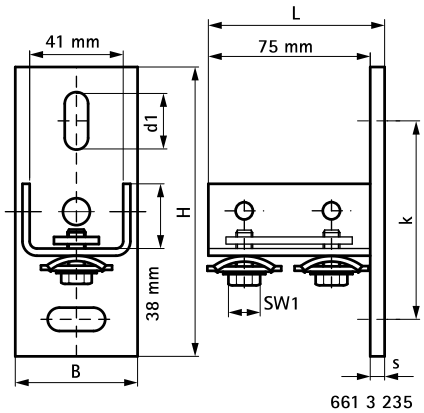
Part No.	T (max.) (ft lbs)	For Rail	$M_{a,y}$ (Nm)	Pack 1
6613200	11	27x18, 30x15, 30x20, 30x30, 30x45	140.0	25