walraven

BIS Pipe Reinforcement Scale

(K 35 07)

support for plastic pipe Ø 16 to 200 mm and Ø 1/2" to 3"

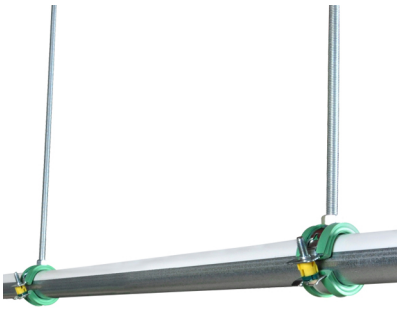

BISMAT® 5000

Features and benefits

- self-gripping and continuous support for plastic pipes to prevent unsatisfactory deflections
- allows for longer distance between supports
- controls direction of pipe expansion. Maintains alignment of pipe, and prohibits "snaking"
- reinforcement fits inside insulation. Maintains "plenum rating"
- lightweight and economical, also 10 foot lengths are easy to handle
- eases handling and speeds installation of plastic pipes
- can be cut with hand tools
- material: steel
- pre-galvanized
- complimentary product: works well with BISMAT® 5000

Part No.	D (mm)	D / CTS (")	D / IPS (")	L	Recommended hanger spacing (ft)	BndS
PSU050-9		1/2	-	9 ft	5	50
PSU075-9		3/4	1/2	9 ft	5	50
PSU100-9		1	3/4	9 ft	6	50
PSU125-9		1-1/4	1	9 ft	7	50
PSU150-9		1-1/2	1-1/4	9 ft	8	50
PSU200-9		2	-	9 ft	8	50
PRM016	16	-	-	3 m	5	50
PRM020	20	-	3/8	3 m	5	50
PRM025	25	-	-	3 m	6	50
PRM032	32	-	-	3 m	7	50
PRM040	40	-	-	3 m	8	50
PRM050	50	-	1-1/2	3 m	8	50
PRM063	63	-	2	3 m	8	50
PRM075	75	-	2-1/2	3 m	8	50
PRM090	90	-	3	3 m	8	50
PRM110	110	-	4	3 m	8	50
PRM125	125	-	4	3 m	8	50
PRM160	160	-	-	3 m	8	50
PRM200	200	-	-	3 m	8	50
PRM250	250	-	-	3 m	8	-
PRM315	315	-	-	3 m	8	-

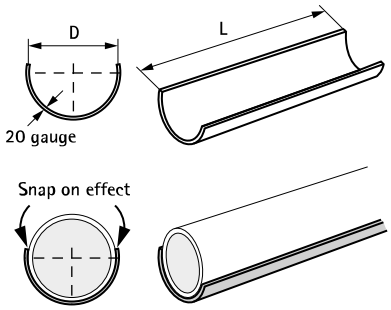

Complementary

Bifix® 5000 G2 (BUP1000)