Walraven Strut Rail Beam Clamp

(H 36 15)

to make Strut rail fabrications

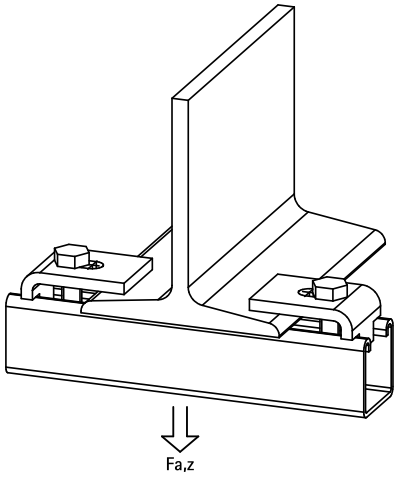

Features and benefits

- for a solid fixing to steel construction without the need for welding or drilling
- always use 2 beam clamps per fixing
- zinc plated
- material: steel 1.0332

Part No.	A (mm)	L	B (mm)	h (mm)	s (mm)	d1 (mm)	k (mm)	$F_{a,z}$ (N)	Pack 1
66583761	15	40 mm	55	20	6.0	22 x 11	30	8,300	50

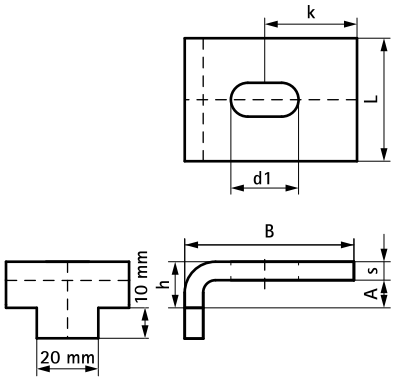

Complementary

Walraven RapidStrut® Fixing Rail (pg)
Walraven RapidStrut® Fixing Rail Double (pg)

Alternative

Walraven Strut 41x21D 'Heavy Duty' Set
Walraven Strut 'Heavy Duty' Beam Clamp
Walraven Strut Rail Beam Clamp

EN-UK 10/2024- Subject to modifications