Walraven Strut Floor Bracket

(H 16 50)

to make Strut rail fabrications

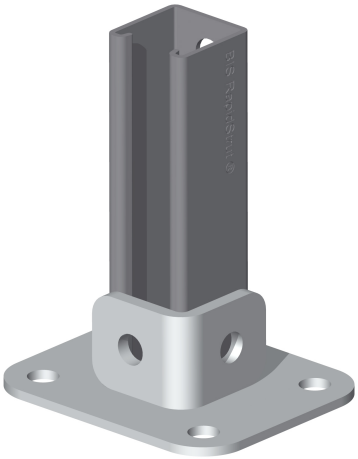

Features and benefits

- to make fabrication with Strut Rail
- easy fitting due to rounded edges
- zinc plated
- material: steel 1.0332
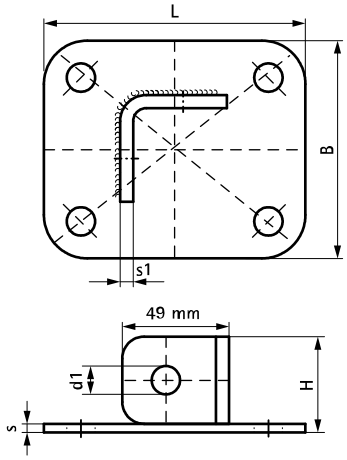
Part No.	L	B (mm)	H (mm)	s (mm)	s1 (mm)	d1 (mm)	For Rail	ST	Pack 1
66583602	120 mm	100	44	4.0	4.0	Ø 13	Strut 41x41	zinc plated	15