Walraven RapidStrut® Fixing Rail (BUP1000)

(H 04 13)

for medium weight fixing applications

65018627 65018647 65018667 65018687

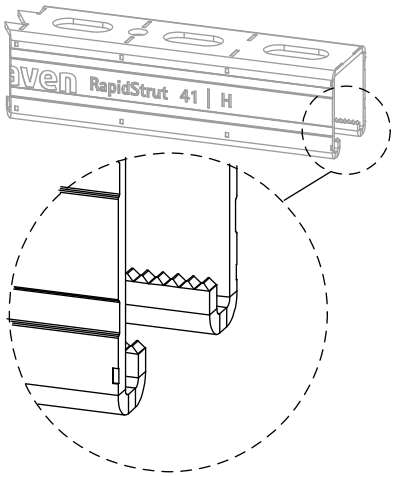

Features and benefits

- universal rail system
- corrosion protection remains intact after cutting
- distance between rail end and first hole is always equal
- inward formed flanges with serrated profile for extra grip
- with continuous smart hole pattern including round anchor holes
- with sawing marks each 50 mm on all 3 sides of the profile
- surface protection:
  - product is part of the Walraven BIS UltraProtect® 1000 system
  - suitable for in- and outdoor applications
  - stands min. 1,000 hours salt spray test (max. 5% red rust) according to ISO 9227
- material: steel 1.0242 (S250GD)
- Walraven RapidStrut® 41|H and 62|H tested for fire safety according to EN 1363-1
- Walraven RapidStrut® channel support systems (type 21|L, 21|H, 41|L, 41|H) conform to BS 6946:1988, the British Standard Specification for metal channel cable support systems for electrical installations

RAL-GZ 655/C
Cert.Nr. 2015-02

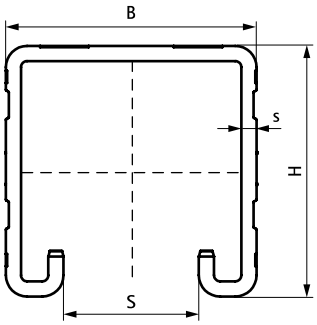

Complementary

Walraven RapidStrut® Slide Nut G2 (BUP1000)
Walraven RapidStrut® Hammerfix G2 (BUP1000)
Walraven Yeti® 130 Support System

Alternative

Walraven RapidStrut® Fixing Rail DS 5 (BUP1000)

Walraven RapidStrut® Fixing Rail (BUP1000)

(H 04 13)

for medium weight fixing applications

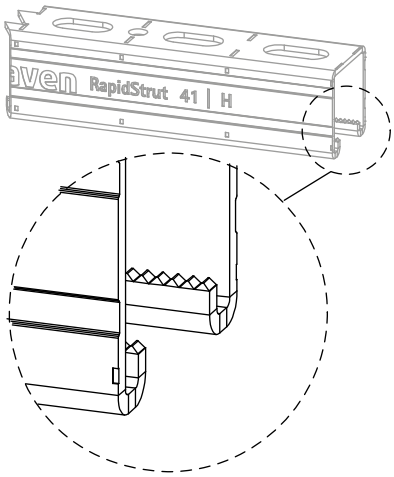

65018627 65018647 65018667 65018687

65018687	82 | H	6 m	41	82	2.50	22	-	60	180	m.	
65018640	41 | H	6 m	41	41	2.50	22	-	60	300	m.	*

RAL[1] = tested, certified and monitored by a third party according to RAL-GZ 655/C.
Walraven RapidStrut® 41|H and 62|H tested for fire safety according to EN 1363-1.
** Unslotted*
For detailed technical information about our RAL marked products, please see the RAL datasheet in our web catalogue.
For more information about the max. allowed load ($F_{a,z}$) please refer to the loading tables or our online datasheet 'Walraven RapidStrut® Data Sheet'.

RAL-GZ 655/C
Cert.Nr. 2015-02

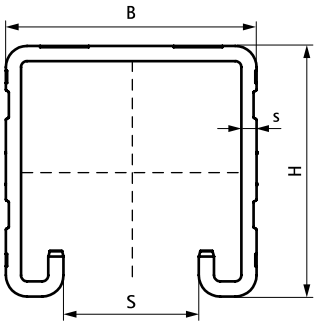

Complementary

Walraven RapidStrut® Slide Nut G2 (BUP1000)
Walraven RapidStrut® Hammerfix G2 (BUP1000)
Walraven Yeti® 130 Support System

Alternative

Walraven RapidStrut® Fixing Rail DS 5 (BUP1000)