Walraven Rail Beam Clamp

(G 40 10)

fixing to steel beam

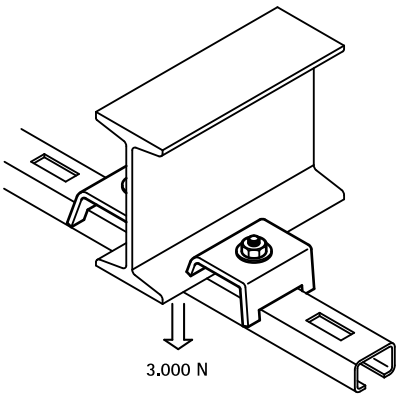

Features and benefits

- beam clamp
- for a solid fixing to steel construction without the need for welding or drilling
- always use 2 beam clamps per fixing
- Part No. 6583060: suitable for 30x15, 30x20, 30x30
- Part No. 6583090: suitable for 30x15, 30x20, 30x30, 30x45
- material: steel
- zinc plated

Part No.	A (mm)	L	For Rail	$F_{a,z}$ (N)	Pack 1
6583060	< 11	60 mm	30x15, 30x20, 30x30	3,000	50
6583090	< 11	90 mm	30x15, 30x20, 30x30, 30x45	3,000	50

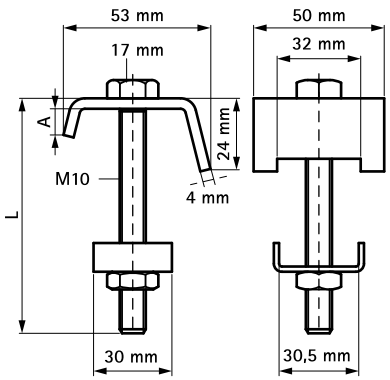

Alternative

Walraven RapidRail® Beam Clamp