walraven

Britclips® Universal Beam Clip

(J 10 105)

for flange 3 - 20 mm

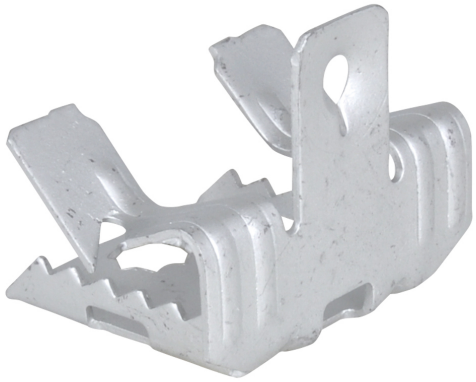

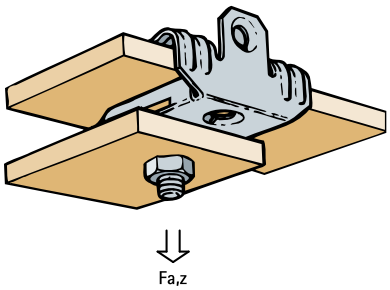

Features and benefits

- for a solid fixing under flanges without welding or drilling
- suitable for horizontal and vertical flanges
- with female thread M6
- material: spring steel (type CS70)
- surface treatment: Delta-Tone 9000 (480 hours)

Part No.	Code	A (mm)	$F_{a,z}$ (N)	Pack 1
EM51420607	H2-4	3.0 - 7.0	450	100
EM51420613	H5-8	8.0 - 12.5	450	100
EM51420620	H9-12	14.0 - 20.0	450	50
For use with static loads only.				

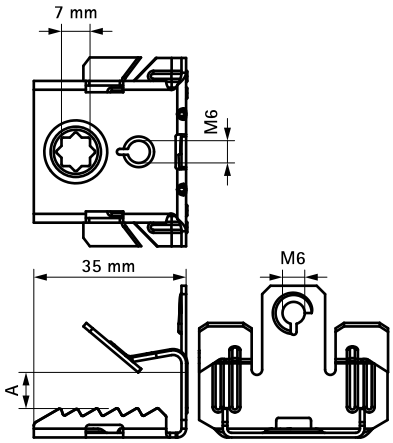

Complementary

BIS Stud Bolt
BIS Cable Tie
BIS Threaded Rod