walraven

Bifix® G2 (M8/10) (BUP1000)

(B 05 04)

for insulated pipe, steel, cast iron and plastic (multilayer) pipe 10 - 225 mm

M8/10

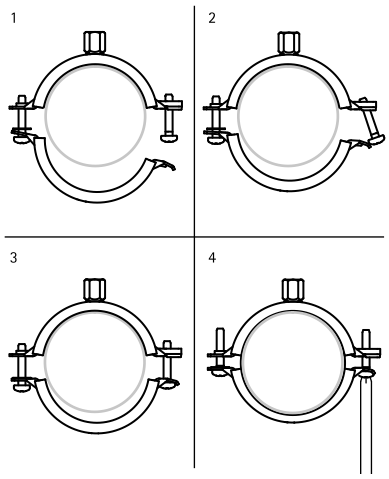

Features and benefits

- two-screw clamp
- with quick locking system
- perfect solution for pipe supports, also for outdoor installations
- material: steel
- surface protection:
  - product is part of the Walraven BIS UltraProtect® 1000 system
  - suitable for in- and outdoor applications
  - stands min. 1,000 hours salt spray test (max. 5% red rust) according to ISO 9227

RAL-GZ 655/B
Cert.Nr. 2022-01

RAL-GZ 656
Pending
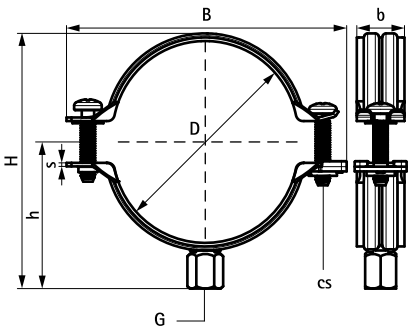
Part No.	D (mm)	D (")	DN	G	B (mm)	H (mm)	h (mm)	b x s (mm)	$F_{a,z}$ (N)	Pack 1
3008014	10 - 14	1/4	8	M8/10	52	35	26	20 x 1.25	1,200	50
3008019	15 - 19	3/8	10	M8/10	59	42	29	20 x 1.25	1,200	50
3008023	20 - 23	1/2	15	M8/10	63	46	31	20 x 1.25	1,200	50
3008028	25 - 28	3/4	20	M8/10	68	51	33	20 x 1.25	1,200	50
3008035	31 - 35	1	25	M8/10	74	57	36	20 x 1.25	1,200	50
3008039	36 - 39	-	-	M8/10	80	63	40	20 x 1.25	1,200	50
3008045	40 - 45	1 1/4	32	M8/10	84	67	41	20 x 1.25	1,200	50
3008052	48 - 52	1 1/2	40	M8/10	91	74	45	20 x 1.25	1,200	50
3008058	54 - 58	-	-	M8/10	97	80	48	20 x 1.25	1,200	50
3008064	60 - 64	2	50	M8/10	104	87	51	20 x 1.25	1,200	50
3008070	66 - 70	-	-	M8/10	110	92	54	20 x 1.50	1,200	50
3008079	75 - 79	2 1/2	65	M8/10	118	100	58	20 x 1.50	1,300	50
3008083	80 - 83	-	-	M8/10	125	108	62	20 x 1.50	1,300	50
3008091	88 - 91	3	80	M8/10	133	114	66	23 x 2.00	1,800	50
3008105	100 - 105	-	-	M8/10	147	123	73	23 x 2.00	1,800	50
3008115	108 - 115	4	100	M8/10	155	137	77	23 x 2.00	1,800	25
3008130	125 - 130	-	-	M8/10	172	145	85	23 x 2.00	1,800	25
3008140	133 - 140	5	125	M8/10	180	162	89	23 x 2.00	1,800	25
3008160	152 - 160	-	-	M8/10	201	171	100	23 x 2.00	1,800	25
3008169	165 - 169	6	150	M8/10	217	190	107	25 x 2.50	3,600	25
3008180	176 - 180	-	-	M8/10	229	203	113	25 x 2.50	3,600	15
3008200	192 - 200	-	-	M8/10	248	209	123	25 x 2.50	3,600	15
3008210	205 - 210	-	-	M8/10	261	238	129	25 x 2.50	3,600	15
3008225	219 - 225	8	200	M8/10	275	249	136	25 x 2.50	3,600	15