walraven

BIS Yeti® 130 Support System

(I 04 50)

for Light Rooftop Installations

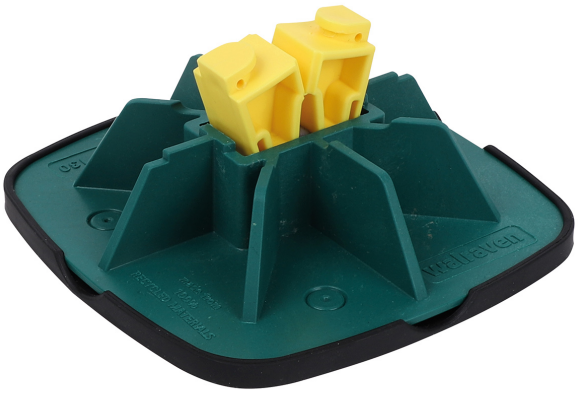

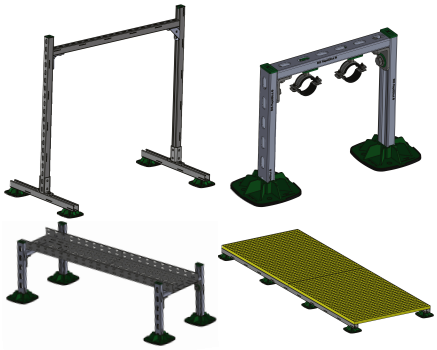

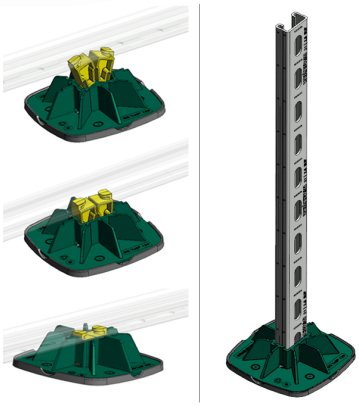

ITB No.
LZM00-02259

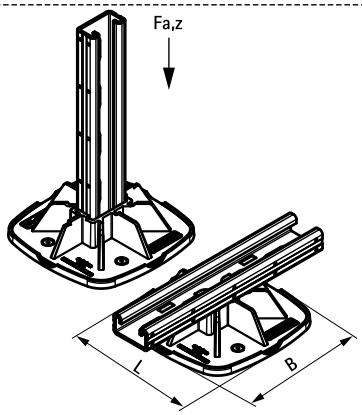

Features and benefits

- modular supporting system for light rooftop installations
- for horizontal and vertical applications
- flexible and cost-effective solution for pipes, cable runs, air duct channels etc.
- with non-slip anti-vibration mat
- with unique click-mechanism for quick and safe installation
- noise reduction according to DIN EN ISO 10140-1 and DIN EN ISO 10140-3
- UV-resistance according to EN ISO 16474-3:2014-02 - certified by ITB
- mouldings made of WPC, a composite of recycled plastic and wood fibre
- plastic components made from 100% recycled material
- resistant to UV and chemical influences

Part No.	Model	L	B (mm)	For Rail	$F_{a,z}$ (N)	Pack 1
67685130	Including non-slip anti-vibration mat	130 mm	130	Strut 41x21	2,500	10

For a detailed calculation and for support how to spread the load please contact Walraven Technical Support.
In cases where a foot is used in roof applications, the installer is obliged to verify maximum load capacity of roof before installation.