Walraven Strut 41x21D 'Heavy Duty' Set

(H 36 25)

fixing to steel beam up to flange 35 mm

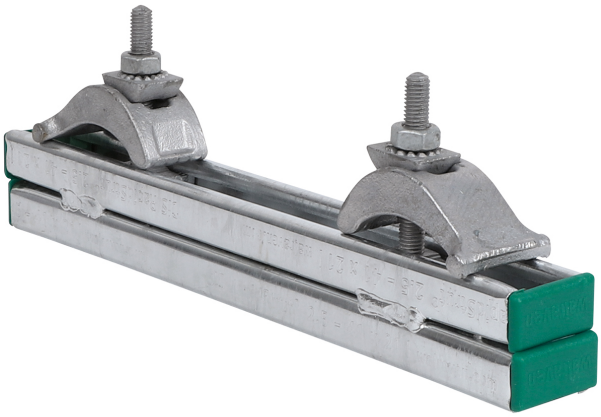

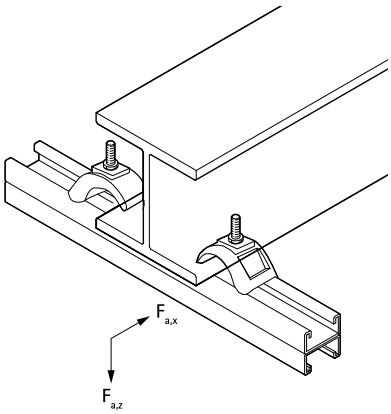

Features and Benefits

- solid cast iron beam clamp for suspension of heavy loads onto beams without welding or drilling
- up to flange thickness 35 mm
- material: beam clamp made of steel; rail made of steel 1.0332
- beam clamp also available loose
- hot dip galvanized
- consists of:
  - 1 length of Strut Rail 41x21D
  - 2 Beam clamps (Part No. 607 2 002)
  - 4 Rail End Caps

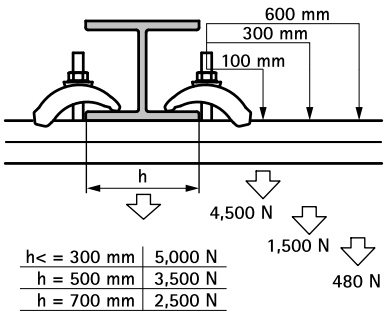

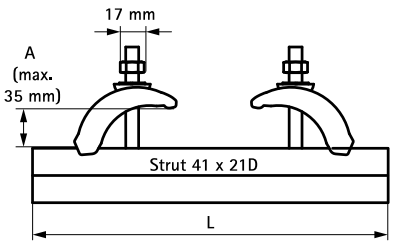

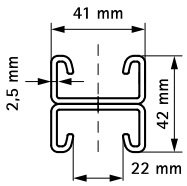

Part No.	A (mm)	L	From Rail	$F_{a,z}$ (N)	$F_{a,x}$ (N)	Pack 1
6073400	< 35	400 mm	Strut 41x21D	5.000*	1,500	4
6073600	< 35	600 mm	Strut 41x21D	5.000*	1,500	4

** h<=300mm, see drawing.*

Complementary

Walraven RapidStrut® Hammerfix G2 (BUP1000)
Walraven RapidStrut® Hammerfix 'U' G2 (BUP1000)