Walraven RapidStrut® Stainless Steel Cantilever Arm

(M 50 05)

fixing to wall

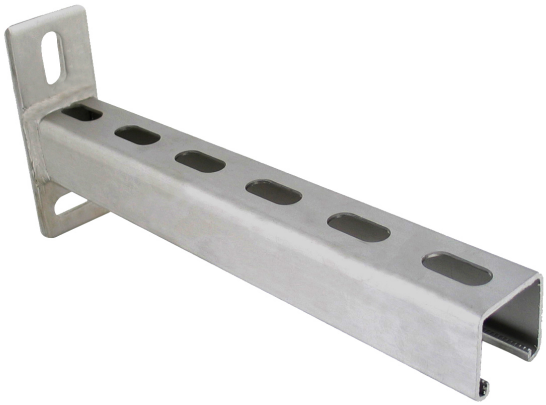

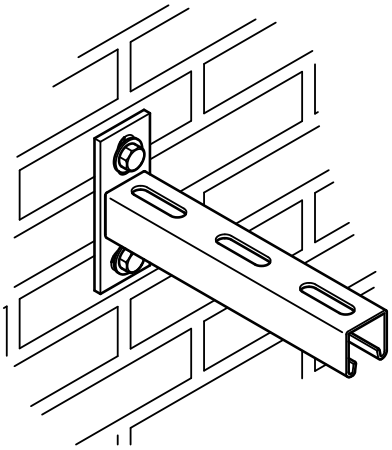

Features and Benefits

- wall plate welded on Strut Profile
- slots at 90° to each other to simplify fixing
- CO_2 welded
- inward formed flanges with serrated profile for extra grip
- for more information about the max. allowed load ($F_{a,z}$) please refer to the loading tables or our online datasheet 'Walraven RapidStrut® Data Sheet'
- material: stainless steel 1.4401 (AISI 316)

Part No.	L	B (mm)	H (mm)	s (mm)	s1 (mm)	d1 (mm)	S (mm)	k (mm)	From Rail	Pack 1
6607861	150 mm	45	130	2.5	8.0	30 x 13	22	87.5	Strut 41x41	10
6607870	200 mm	45	130	2.5	8.0	30 x 13	22	87.5	Strut 41x41	10
6607862	300 mm	45	130	2.5	8.0	30 x 13	22	87.5	Strut 41x41	10
6607874	400 mm	45	130	2.5	8.0	30 x 13	22	87.5	Strut 41x41	10
6607863	450 mm	45	130	2.5	8.0	30 x 13	22	87.5	Strut 41x41	10
6607873	500 mm	45	130	2.5	8.0	30 x 13	22	87.5	Strut 41x41	10
6607864	600 mm	45	130	2.5	8.0	30 x 13	22	87.5	Strut 41x41	8
6607865	750 mm	45	130	2.5	8.0	30 x 13	22	87.5	Strut 41x41	8

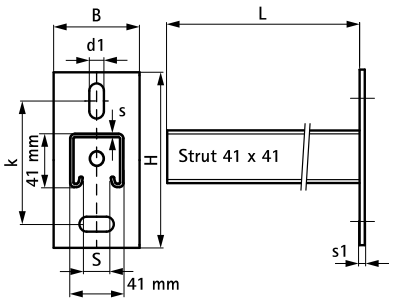

Complementary

Walraven RapidStrut® Stainless Steel Slide Nut G2
Walraven RapidStrut® Stainless Steel Slide Nut with Tabs
BIS Strut Stainless Steel Tee-Bolt

Complementary

Walraven RapidStrut® Stainless Steel Base Plate G2