Walraven RapidRail® Stainless Steel Beam Clamp

(M 37 05)

fixing to steel beam

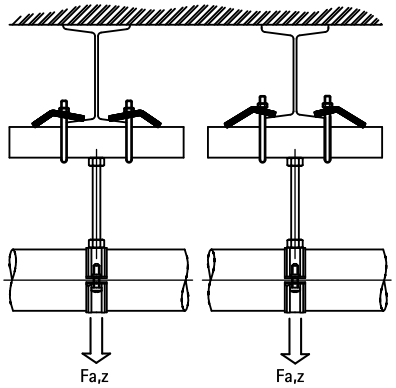

Features and Benefits

- for a solid fixing to steel construction without the need for welding or drilling
- always use 2 beam clamps per fixing
- material: stainless steel 1.4401 (AISI 316)

Part No.	A (mm)	SW1 (mm)	For Rail	$F_{a,z}$ (N)	Pack 1
6587011	< 16	10	30x15, 30x20, 30x30	4,500	50

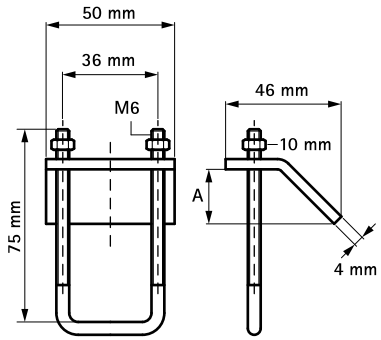

Complementary

Walraven RapidRail® Stainless Steel Fixing Rail