Walraven Fixing Brackets - 755 / 756

(I 08 30)

790 4 150

790 4 0XX

Features and Benefits

- for fixing solar panels to Strut rail
- material: steel
- surface treatment: Dacromet
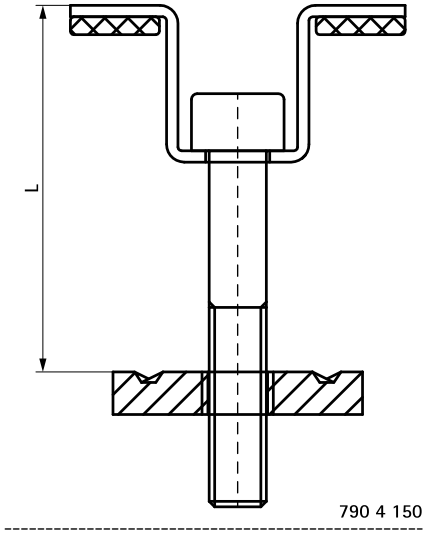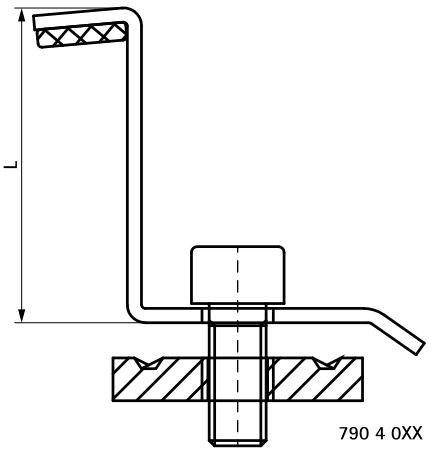
Part No.	Model	L	Pack 1
7904150	Middle Clamp	35 - 50 mm	20
7904035	End Clamp	35 mm	20
7904040	End Clamp	40 mm	20
7904045	End Clamp	45 mm	20
7904050	End Clamp	50 mm	20