walraven

Rubber Lined Clevis Hanger

(A 17 305)

Features and Benefits

- designed for chilled water pipe work and fire fighting systems
- design permits vertical adjustment of pipe after installation
- hanger load nut above clevis must be tightened securely to ensure proper hanger performance
- material: steel
- electrogalvanized as per ASTM B 633 Standards (SC3)
- temperature resistance from -20 °C to +110 °C
- noise insulating lining, EPDM rubber, black
- noise reduction up to 18dB (A)
- designed to meet MSS Standard SP-58, type 10 and SP-69

FM APPROVED

UL LISTED

Part No.	D (")	Bolt	H (mm)	b (mm)	s (mm)	s1 (mm)	d1 (mm)	$F_{a,z}$ (N)	FM	UL	Pack 1	
WMC222028	¾	M8 x 68 mm	79	25	3.0	3.0	10	4,000	FM	UL	125	*
WMC222035	1	M8 x 78 mm	85	25	3.0	3.0	10	4,000	FM	UL	125	*
WMC222040	1¼	M8 x 82 mm	95	25	3.0	3.0	10	4,000	FM	UL	125	*
WMC222048	1½	M8 x 88 mm	103	25	3.0	3.0	10	4,000	FM	UL	100	*
WMC222060	2	M10 x 110 mm	120	25	3.0	3.0	10	4,000	FM	UL	75	*
WMC222075	2½	M10 x 125 mm	149	25	4.0	4.0	10	6,500	FM	UL	60	*
WMC222090	3	M10 x 140 mm	176	25	4.0	4.0	10	6,500	FM	UL	50	*
WMC222100	3½	M10 x 155 mm	176	25	4.0	4.0	10	6,500	FM	UL	40	*
WMC222115	4	M10 x 170 mm	201	32	6.0	6.0	10	8,000	FM	UL	20	*
WMC222140	5	M12 x 195 mm	235	32	6.0	6.0	12	8,000	FM	UL	15	*
WMC222168	6	M12 x 225 mm	269	40	6.0	5.0	12	11,000	FM	UL	10	*
WMC222219	8	M12 x 275 mm	341	40	6.0	5.0	12	11,000	FM	UL	15	*
WMC222273	10	M16 x 360 mm	422	40	6.0	6.0	16	11,000	-	-	10	
WMC222323	12	M20 x 420 mm	493	50	9.0	6.0	20	15,000	-	-	6	
WMC222355	14	M20 x 455 mm	559	50	9.0	6.0	20	15,000	-	-	6	
WMC222406	16	M24 x 510 mm	613	65	12.0	6.0	24	17,500	-	-	3	
WMC222457	18	M24 x 555 mm	678	65	12.0	6.0	24	17,500	-	-	3	
WMC222508	20	M24 x 610 mm	718	75	12.0	9.0	30	22,000	-	-	2	
WMC222610	24	M24 x 710 mm	853	75	16.0	9.0	30	27,000	-	-	2	
WMC222755	30	M24 x 890 mm	998	75	19.0	9.0	30	30,000	-	-	-	
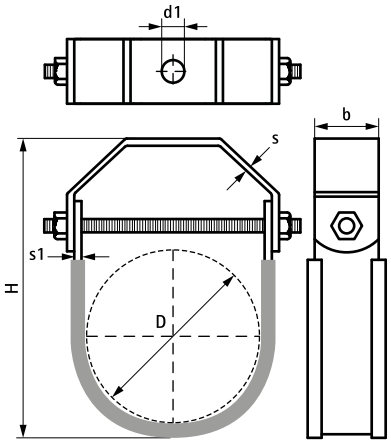
** = Made in UAE.*
Hot Dip Galvanized and Stainless Steel option available on request.
The sizes of the Clevis Hangers can be modified to be used with Rubber Support Inserts.
Custom made Clevis Hangers are available on request.