walraven

Britclips® FC TR

(J 05 50)

for flange 2 - 30 mm

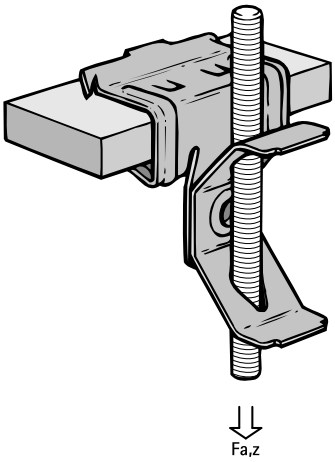

Features and Benefits

- for a solid fixing to steel construction without the need for welding or drilling
- with threaded rod clip (rod height adjustable by sliding)
- material: spring steel (type C67S according to EN10132)
- surface treatment: Delta-Tone 9000 (480 hours)

Part No.	Code	A (mm)	R	$F_{a,z}$ (N)	Pack 1	Pack 2
50620809	FC8 TRM8	4 - 8	M8	350	50	200
For use with static loads only.						

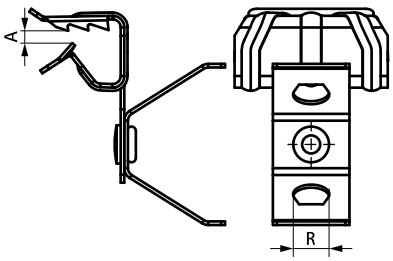

Complementary

BIS Stud Bolt
BIS Threaded Rod

Alternative

Britclips® Tiger