walraven

BISMAT® Rail - Sound Shield

(K 30 25)

accessories of BISMAT® Rail

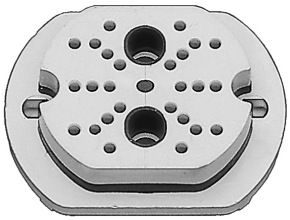

Features and Benefits

- to avoid noise transmission of sanitary wall plates
- material: ABS and EPDM
- sound insulating lining according DIN 4109
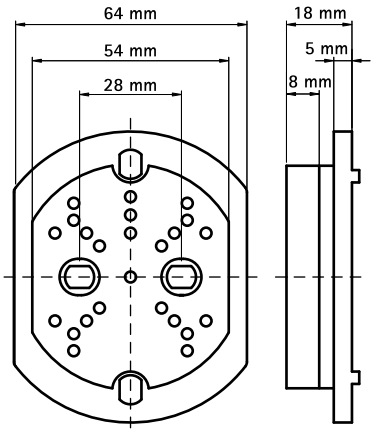
Part No.	For Rail	Pack 1
0835001	BISMAT® Rail	20