walraven

BIS Strut Clamp with Lining

(H 32 05)

for metal pipes Ø 85 - 315 mm

Features and Benefits

- two-part clamp
- for direct fixing of pipes to Strut Rail
- both ends suitable for locating into Strut Rail
- material: steel 1.0226
- pre-galvanized
- sound insulating lining according DIN 4109
- noise insulating lining, EPDM rubber, black

Part No.	D (mm)	D (")	DN	B (mm)	H (mm)	h (mm)	s (mm)	SW1 (mm)	Pack 1
2105090	85 - 90	3	80	98	134	12	2.0	13	50
2105110	105 - 110	-	-	117	159	17	2.5	17	50
2105140	130 - 140	5	125	147	189	17	2.5	17	25
2105160	150 - 160	-	-	165	210	17	3.0	17	25
2105200	190 - 200	-	-	208	244	17	3.0	17	25
2105225	215 - 225	8	200	233	276	17	3.0	17	25
2105250	240 - 250	-	-	258	301	17	3.0	17	25
2105315	315	-	-	323	366	17	3.0	17	25

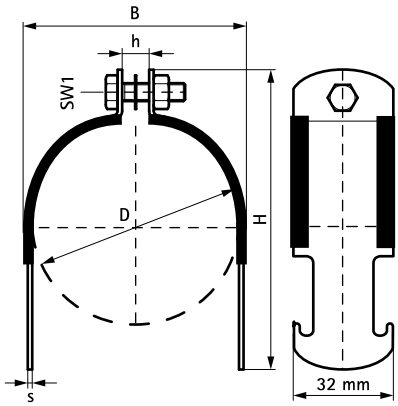

Complementary

Walraven RapidStrut® Cantilever Arm (BUP1000)

Alternative

BIS Strut Clamp