walraven

BIS Stainless Steel Hexagon Nut

(M 80 10)

Features and Benefits

- material: stainless steel 1.4401 (AISI 316)

Part No.	Type	G	H (mm)	SW1 (mm)	Pack 1
6127006	DIN 934	M6	5.0	10	50
6127008	DIN 934	M8	6.5	13	50
6127010	DIN 934	M10	8.0	17	50
6127012	DIN 934	M12	10.0	19	100
6127016	DIN 934	M16	13.0	24	100
M10 and above tested for fire safety.					

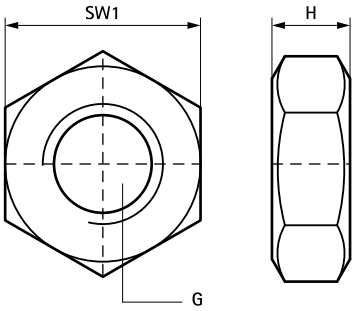

Complementary

BIS Stainless Steel Washer (Flat)