walraven

BIS Duplo KSB1

(A 15 15)

for metal heating pipes 15 - 35 mm

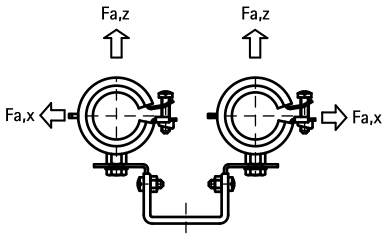

Features and Benefits

- two clamps on connection bracket
- clamp with quick locking system, type KSB
- for fixing of two pipes
- bracket reinforced for extra strength
- centre distance and distance between wall and clamp adjustable
- material: steel
- zinc plated
- noise insulating lining, EPDM rubber, black
- age resistant lining
- sound insulating lining according DIN 4109
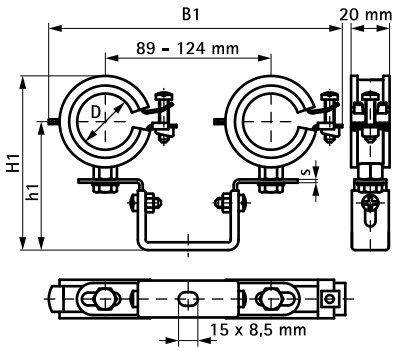
Part No.	D (mm)	D (")	DN	B1 (mm)	H1 (mm)	h1 (mm)	s (mm)	b x s (mm)	$F_{a,z}$ (N)	$F_{a,x}$ (N)	Pack 1
3393218	15 - 18	3/8	10	142 - 165	82 - 94	67 - 79	2.0	20 x 2.0	210	110	25
3393223	20 - 23	1/2	15	142 - 177	93 - 105	70 - 82	2.0	20 x 2.0	210	110	25
3393228	25 - 28	3/4	20	150 - 180	96 - 108	73 - 85	2.0	20 x 2.0	210	110	25
3393235	32 - 35	1	25	152 - 188	100 - 112	77 - 89	2.0	20 x 2.0	210	110	25