walraven

# BIS Safety Strap for Beam Clamp Model C

*(K 20 06)*

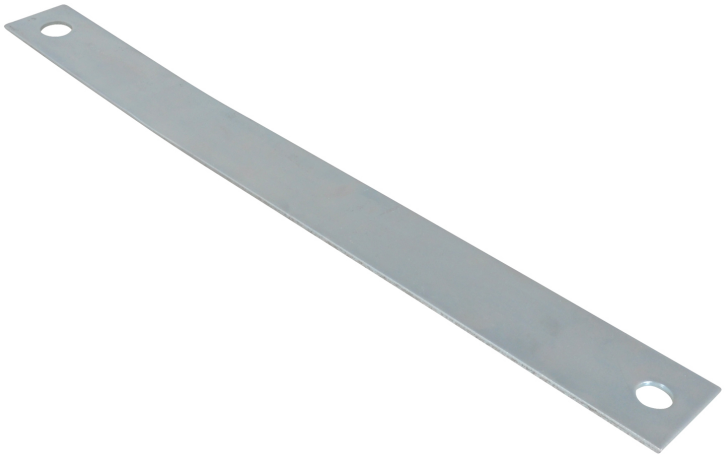

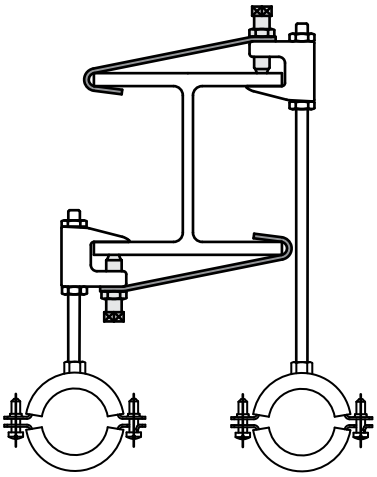

## Features and benefits

- Safety Strap needs to be bent by hand
- material: steel
- pre-galvanized
- see also: BIS Beam Clamps Model C (page K 20 05)

| Part No. | R | R2 | L | B (mm) | Pack 1 |
|---|---|---|---|---|---|
| 6015110 | Ø 10.5 mm | Ø 12.5 mm | 350 mm | 25 | 25 |
| 6015112 | Ø 12.5 mm | Ø 16.5 mm | 400 mm | 40 | 25 |

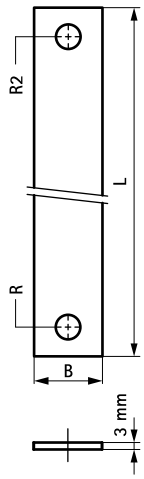


**Complementary**

BIS Beam Clamp Model C