BIS Height Adjuster

(K 25 25)

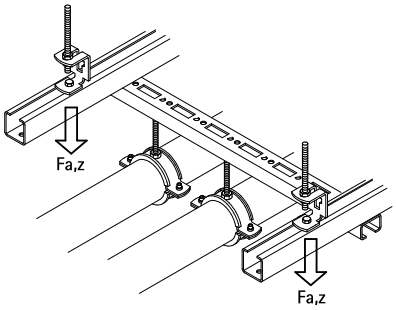

Features and benefits

- 30 mm continuously variable height adjustable
- for stud bolt M8 or M10
- can also be used as rail suspension element
- material: steel 1.0332
- zinc plated
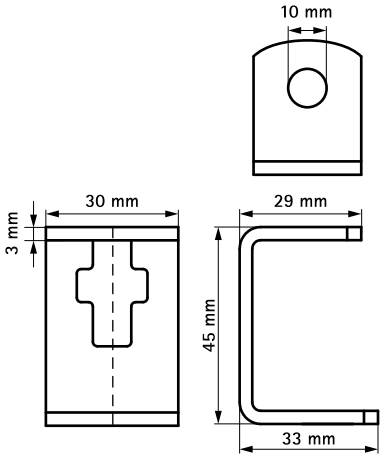
Part No.	R	$F_{a,z}$ (N)	Pack 1
6793810	M8 - M10	1,690	50