BIS Wall Plate 672 (Male Thread)

(K 15 15)

fixing to ceiling or floor

Features and benefits

- fixings to ceiling or floor (only tension loads recommended)
- slots at 90° to each other to simplify fixing
- with resistance welded male stud bolt
- material: steel
- zinc plated
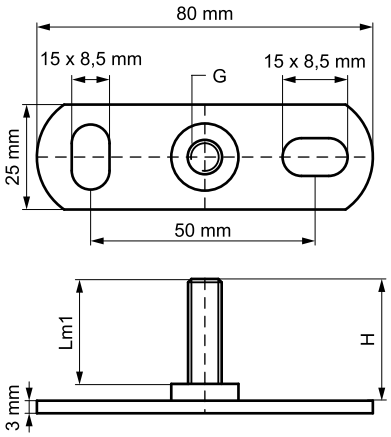
Part No.	G	H (mm)	Lm1 (mm)	$F_{a,z}$ (N)	Pack 1	Pack 2
6723006	M6	28	25	2,500	50	250
6723108	M8	13	10	2,500	50	250
6723008	M8	28	25	2,500	50	250
6723110	M10	15	12	2,500	50	250
6723010	M10	38	35	2,500	50	150