BIS Isonyl

(C 10 08)

for fixing of cables and tubes 15 - 50 mm

Features and benefits

- one-part clamp
- patented security closing
- hole for M6 screw
- can also be installed with direct fixing gas tools
- can be used with all kind of pipes
- material: PP (polypropylene), grey
- UV resistant
- flexible and elastic
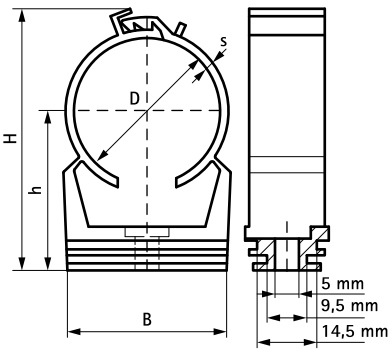
Part No.	D (mm)	D (")	DN	B (mm)	H (mm)	h (mm)	s (mm)	$F_{a,z}$ (N)	$F_{b,z}$ (N)	Pack 1	Pack 2
0853615	15 - 16	-	-	21	34.5	21.5	1.2	150	450	100	1,000
0853618	18 - 20	-	-	25	38.0	24.0	1.8	150	450	100	1,200
0853622	22 - 25	-	-	30	42.0	25.0	1.7	150	450	100	1,200
0853626	26 - 28	¾	20	33	47.0	27.0	2.0	150	450	50	500
0853632	32 - 35	1	25	38	59.0	36.0	2.0	150	450	50	600
0853640	40 - 42	-	-	46	65.0	36.0	2.4	150	450	25	300
0853648	48 - 50	1½	40	56	75.0	41.0	3.1	150	450	25	300