BIS Hammer-in Stud

(L 15 10)

fixing to wall or ceiling

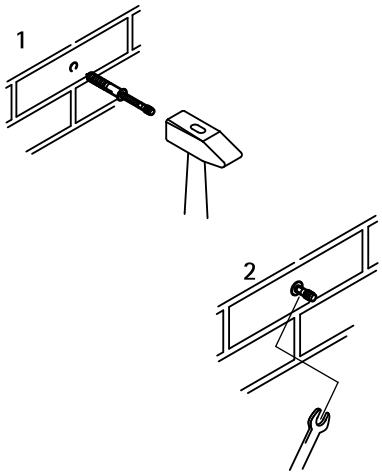

Features and benefits

- impact head to prevent head damage
- with hexagon for fine setting
- plug with shoulder
- material: hammer-in stud made of steel; plug made of PA (polyamide), grey
- zinc plated

Part No.	G	L	Lm1 (mm)	Pack 1	Pack 2
6223808	M8	80 mm	14	100	500
6223810	M8	100 mm	34	100	500
6223812	M8	120 mm	34	100	500
6223815	M8	150 mm	50	100	500

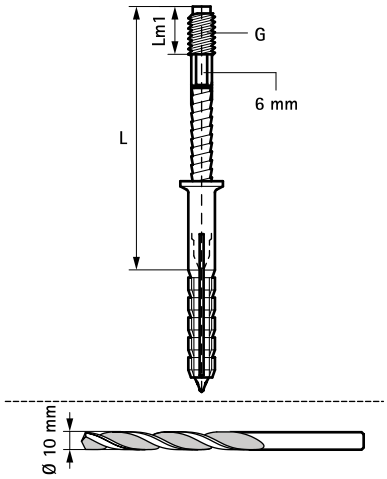

EN-UK 04/2024- Subject to modifications