Walraven Strut Wall Plate (Hinged) (BUP1000)

(H 12 25)

fixing to wall

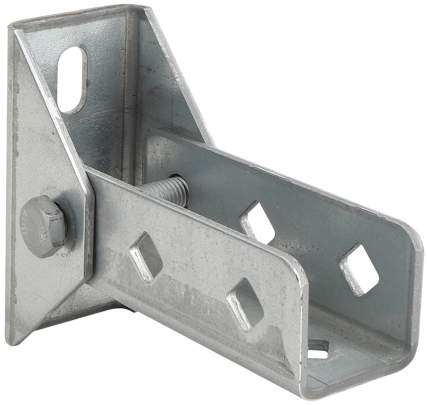

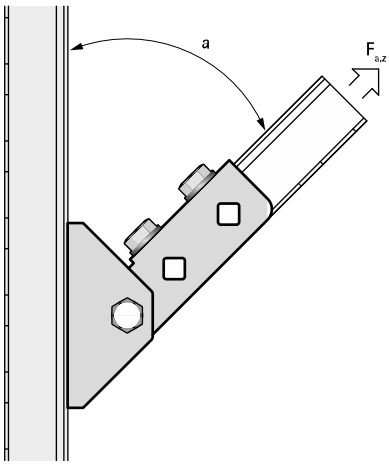

Features and Benefits

- wall plate with hinging U-profile
- for wall fixing of rail
- rail can be fixed with slot downwards or sideways
- also used to strengthen constructions with Strut 41x41
- material: steel 1.0332
- surface protection:
  - product is part of the Walraven BIS UltraProtect® 1000 system
  - suitable for in- and outdoor applications
  - stands min. 1,000 hours salt spray test (max. 5% red rust) according to ISO 9227

Part No.	L	B (mm)	H (mm)	b (mm)	s (mm)	d1 (mm)	d2 (mm)	S (mm)	k (mm)	k1 (mm)	For Rail	$F_{a,z}$ (N)	Pack 1	
66588814	120 mm	83	157	59	4.0	25x12.2	13.8	42	71	50	Strut	2,500	10	*

Max. allowed load ($F_{a,z}$) under an angle of 45°.
** Tested with rail 41x41x2.5 with throughbolts. More details can be found on the Technical Datasheet.*

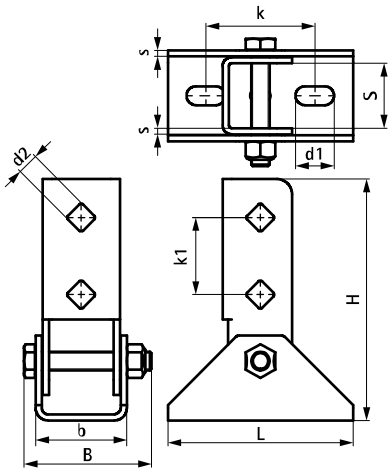

Complementary

Walraven RapidStrut® Fixing Rail (pg)