walraven

Walraven Rail Prop (BUP1000)

(H 16 05)

reinforcement of cantilever arm

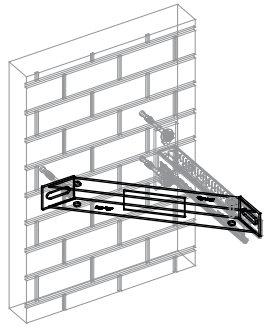

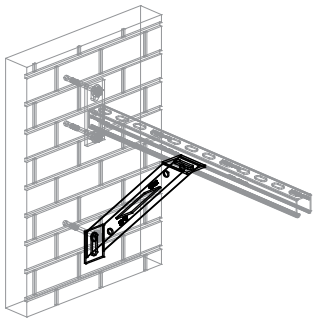

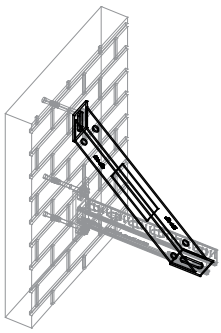

Features and Benefits

- 45° support bracket
- for fixing support under, top or on side of a cantilever arm
- also used to strengthen rail constructions
- CO_2 welded
- material: steel 1.0332
- surface protection:
  - product is part of the Walraven BIS UltraProtect® 1000 system
  - suitable for in- and outdoor applications
  - stands min. 1,000 hours salt spray test (max. 5% red rust) according to ISO 9227

Part No.	For Rail	Pack 1
66288530	Strut + 38x40	10

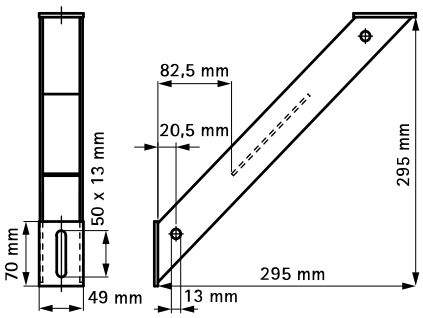

Complementary

Walraven RapidStrut® Fixing Rail DS 5 (BUP1000)
Walraven RapidStrut® Cantilever Arm (BUP1000)