Walraven Maxx Beam Clamp

(H2 05 46)

for fixing profiles to beams

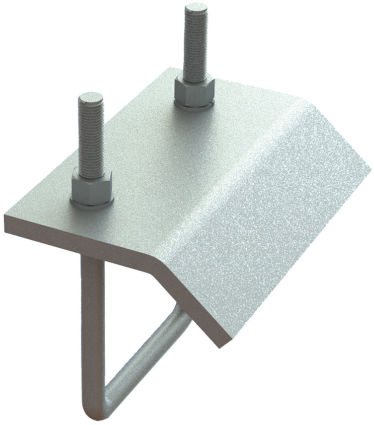

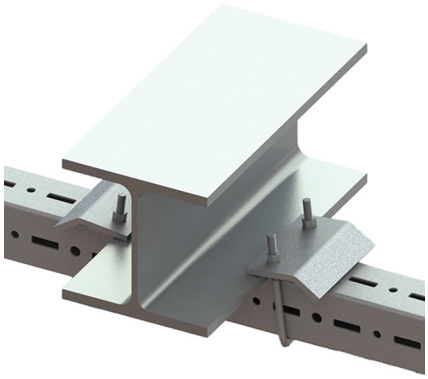

Features and Benefits

- for a solid fixing to steel construction without the need for welding or drilling
- always use 2 beam clamps per fixing
- Part No. 6589110: suitable for MX100 and MX120
- Part No. 6589109: suitable for MX80
- Part No. 6589115: suitable for MX150
- material: steel S235JR
- hot dip galvanized

Part No.	Type	A (mm)	G	L	B (mm)	B2 (mm)	H (mm)	s (mm)	Lm1 (mm)	$F_{a,z}$ (N)	Pack 1
6589109	BC80	10 - 25	M12	107 mm	135	82	162	10.0	74	11,200*	-
6589110	BC100/120	10 - 25	M12	117 mm	173	101	190	10.0	70	12,400*	-
6589115	BC150	10 - 25	M12	117 mm	173	101	220	10.0	80	12,400*	-

** = Maximum allowed load per pairs.*

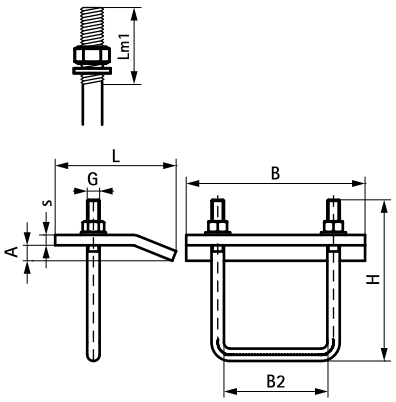

Complementary

Walraven Maxx Heavy Rail Profile