BIS dB-FiX® 80 Fixing Point Assembly

(E 05 20)

for noise insulation fixing point

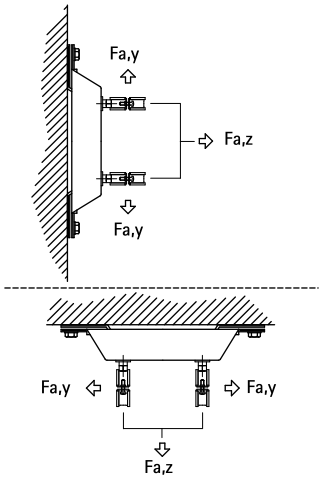

Features and Benefits

- noise insulating fixing point for pipes up to Ø 2" (clamp BIS HD500 Ø 59 - 65 mm)
- very stable
- material: steel
- sound insulating lining according DIN 4109
- zinc plated
- noise insulation by moulded EPDM rubber

Part No.	G	$F_{a,z}$ (N)	$F_{a,y}$ (N)	Pack 1
6693008	M10	3,000	2,700	10

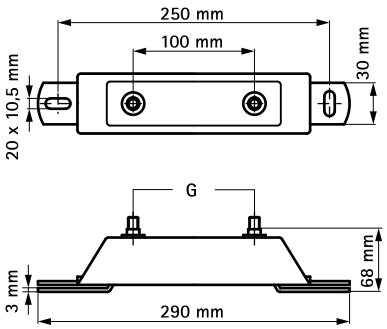

Complementary

Walraven RapidStrut® Fixing System
BIS dB-FiX® 80 / 200 Mounting Kit

Alternative

BIS dB-FiX® 200 Fixing Point Assembly

EN-INT 04/2024- Subject to modifications