walraven

BIS Hose Clamp

(B 30 45)

for Hose Clamps 10 - 160 mm

3017

Features and Benefits

- high tensile strength
- maximum secured against torque overload
- optimal hose protection
- compliant with the EU-guidelines 2000/53/EG (regarding chrome 6)
- material: steel
- zinc plated
- screw and worm housing zinc plated, blue passivated
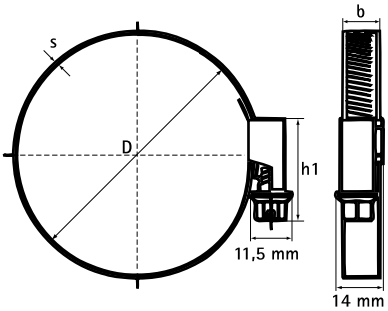
Part No.	D (mm)	h1 (mm)	b x s (mm)	Pack 1	Pack 2
0680016	10 - 16	21	9 x 0.7	100	1,000
0680020	12 - 20	24	9 x 0.7	100	1,000
0680025	16 - 25	24	9 x 0.7	100	1,000
0680032	20 - 32	24	9 x 0.7	100	1,000
0680040	25 - 40	26	9 x 0.7	100	1,200
0680050	35 - 50	26	9 x 0.7	50	500
0680060	40 - 60	26	9 x 0.7	50	600
0680080	60 - 80		9 x 0.7	50	500
0680090	70 - 90		9 x 0.7	50	400
0680110	90 - 110	26	9 x 0.7	25	250
0680120	100 - 120		9 x 0.7	25	200
0680130	110 - 130		9 x 0.7	25	200
0680160	140 - 160		12 x 0.7	25	150