walraven

BIS Beam Clamp Model C (BUP1000)

(K 20 03)

for flange

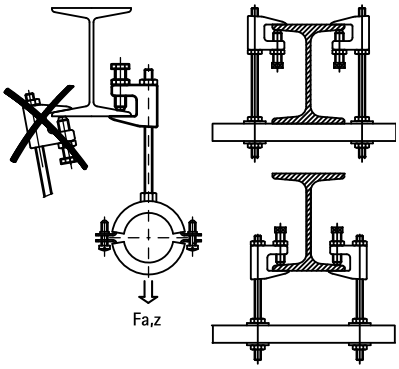

Features and Benefits

- for a solid fixing to steel construction without the need for welding or drilling
- according to VdS-regulations an additional safety strap should be used when supporting pipes above DN65
- surface protection:
  - product is part of the Walraven BIS UltraProtect® 1000 system
  - suitable for in- and outdoor applications
  - stands min. 1,000 hours salt spray test (max. 5% red rust) according to ISO 9227

FM APPROVED VdS UL LISTED EX28476

Part No.	Code	Model	A (mm)	R	G	B (mm)	H (mm)	SW1 (mm)	$F_{a,z}$ (N)	$F_{a,z}$ (kg)	FM	VdS	Pack 1
6008008	TK10-M8	BIS Beam Clamp model C	≤23	M8	M10	50	45	17	2,500	250	-	VdS	50
6008010	TKN10-M10	BIS Beam Clamp model C	≤20	M10	M10	44	42	17	2,500	250	FM	VdS	50
6008910	TKN10-D11	BIS Beam Clamp model C	≤20	Ø 11 mm	M10	44	42	17	2,500	250	FM	VdS	50
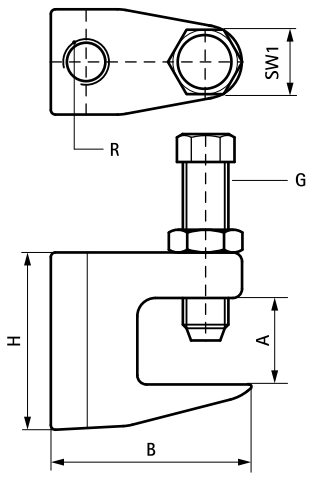
Tighten the set screw with hand and apply a further 1/2 turn with a spanner.Tighten counter nut with hand and apply a further 1/8 turn with a spanner.Certificates available on request.