BIS 3000 (zp)

(B 35 15)

for plastic pipes 32 - 200 mm

M6 - M8

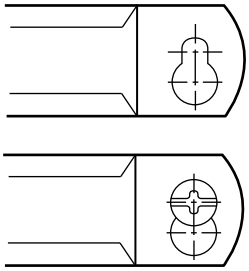

Features and Benefits

- two-screw clamp
- with 'keyhole closing'
- for rigid fixing point fastening it is necessary to use lining (Part No. 0814025)
- inside clamp diameter larger than outside pipe diameter for expansion or contraction of the pipe
- outside profile to protect pipes from damage
- material: steel
- zinc plated

Part No.	D (mm)	DN	G	B (mm)	H (mm)	h (mm)	b x s (mm)	$F_{a,z}$ (N)	Pack 1
0811032	32	25	M8	70	54	33	18 x 2.0	1,320	25
0811040	40	32	M8	82	67	40	20 x 2.0	1,320	25
0811050	50	40	M8	94	77	45	20 x 2.0	1,320	25
0811063	63	57	M8	109	89	51	20 x 2.0	1,320	25
0811075	75	70	M8	121	99	56	20 x 2.0	1,320	100
0811080	80	-	M8	131	103	57	20 x 2.0	1,320	50
0811090	90	80	M8	136	114	63	20 x 2.0	1,320	100
0811110	110	100	M8	163	135	73	25 x 2.5	2,070	25
0811125	125	125	M8	178	149	80	25 x 2.5	2,070	25
0811160	160	150	M8	213	184	98	25 x 2.5	2,070	25
0811200	200	200	M8	256	224	118	25 x 2.5	2,070	25

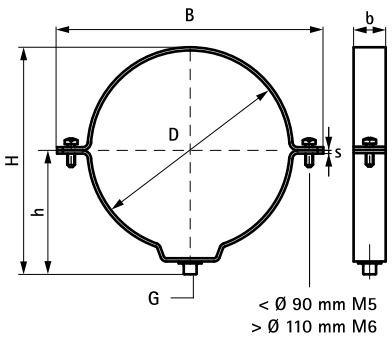

Complementary

Walraven Fixing Accessories
Walraven Fastenings
BIS Lining 3000 Clamp

Alternative

BIS 434 Clamp

EN-INT 04/2024- Subject to modifications