WDI1 Drop-in Anchor

(L 03 05)

standard drop-in anchor

Features and benefits

- simple and quick installation procedure
- medium load capacity
- no collar for anchor setting at greater hole depth
- material: steel
- zinc plated
- ETA ETAG001 Part 6 approval for multiple use for non-structural applications
- fire resistance class R30-R120 for design of anchorages under exposure to fire (M8-M16)
- substrate type:
  - cracked concrete
  - non-cracked concrete

Part No.	Code	Size	L	d_0 (mm)	h_0 (mm)	h_{min} (mm)	h_{nom} (mm)	Rec. Tension Load C20/25 Concrete (kN)	ETA	Pack 1	Pack 2
6103006	WDI1 6x25	M6	25 mm	8	≥ 30	80	≥ 25	0.52*	ETA	100	2,400
6103008	WDI1 8x30	M8	30 mm	10	≥ 32	80	≥ 30	1.02*	ETA	100	600
6103010	WDI1 10x40	M10	40 mm	12	≥ 42	80	≥ 40	1.55*	ETA	50	500
6103012	WDI1 12x50	M12	50 mm	15	≥ 53	100	≥ 50	2.19*	ETA	50	300
6103016	WDI1 16x65	M16	65 mm	20	≥ 70	130	≥ 65	4.53*	ETA	25	200

** Recommended loads: are stated for multiple use for non-structural applications according to ETAG001, Part 6; apply to anchors correctly installed at maximum embedment depth; include partial safety factor and an overall partial safety factor for action of 1.4.*
The partial safety factor for action depends on the type of loading and shall be taken from national regulations. All anchor failure modes and the entire relevant product European Technical Assessment must be considered for anchor design.
For more information, please refer to the ETA report.

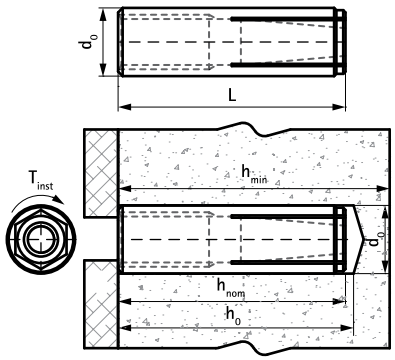

Complementary

WDI1 Setting Tool
WIS Brush
WIS Blow Pump

Complementary

WDI1 SD Stop Drill Bit
WSDS+ 3CE Concrete Drill Bit

EN-UK 04/2024- Subject to modifications