Pacifyre® AWM III Fire Collar

(U 04 35)

for penetrations with flammable pipes 32 - 180 mm

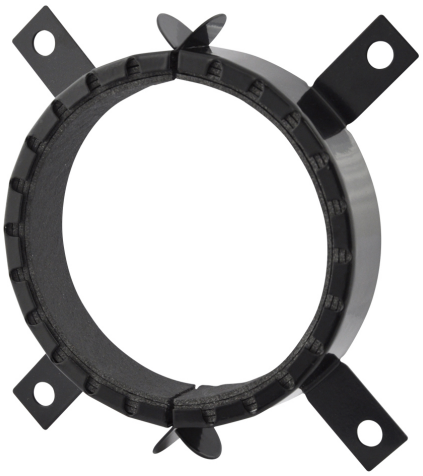

Features and benefits

- built-up fire collar for plastic (combustible) pipes and pipe systems. For apertures in walls (solid walls or light partition walls) and ceilings with fire protection in accordance with UK Legislation
- suitable for damp conditions
- low collar height, allowing building of bends, sockets and T-joints close to the wall or ceiling
- should be fitted to both sides of a wall and on one side below a ceiling
- build in is possible without additional fixings (by simply bending and sliding the fixing tabs)
- economical alternative for the Pacifyre® AWM II in standard installation situations
- in problematic built-in situations the use of an oversized collar is permitted (up to max. 3 sizes bigger)
- easily installed due to 2 part collar construction
- various finish possibilities, e.g. acrylic sealant, mortar, etc.
- maintenance free
- zero distance is possible between fire collars
-
- tested according to EN 1366-3
-
- European approval: ETA-13/0906

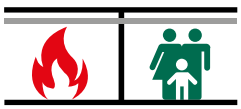

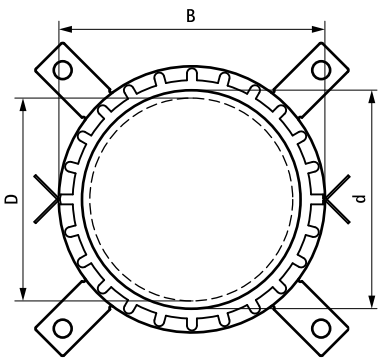

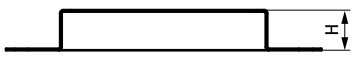

Part No.	D (mm)	d (mm)	Model	B (mm)	H (mm)	Pack 1
2135032034	32	38	2 fixing tabs	47	26	10
2135040042	40	46	2 fixing tabs	55	26	10
2135050052	50	56	2 fixing tabs	65	26	10
2135063065	63	69	4 fixing tabs	82	26	10
2135075077	75	81	4 fixing tabs	94	26	10
2135090092	90	96	4 fixing tabs	114	26	10
2135110112	110	116	4 fixing tabs	134	26	10
2135125125	125	132	4 fixing tabs	150	40	10
2135140140	140	144	4 fixing tabs	168	40	2
2135160160	160	164	4 fixing tabs	188	40	2
2135180180	180	184	4 fixing tabs	218	40	2

Complementary

Pacifyre® FPM
Pacifyre® Fixing Set 1
Pacifyre® ID-Card

EN-UK 04/2024- Subject to modifications