walraven

BIS Toggle Plug

(L 10 86)

fixing to hollow walls

067 0 62X

067 0 71X

Features and benefits

- U-profile with rotating shaft with stud bolt
- for fixing in hollow walls and hollow ceilings or profiled roofing sheets
- material: steel
- zinc plated

Part No.	Model	G	L	B (mm)	HØ (mm)	SW1 (mm)	Pack 1
0670620	Screw hook	M4	75 mm	-		7	25
0670621	Screw hook	M5	75 mm	-		8	25
0670622	Screw hook	M6	70 mm	-		10	15
0670716	Screw hook	M6	95 mm	68.5	17	10	20
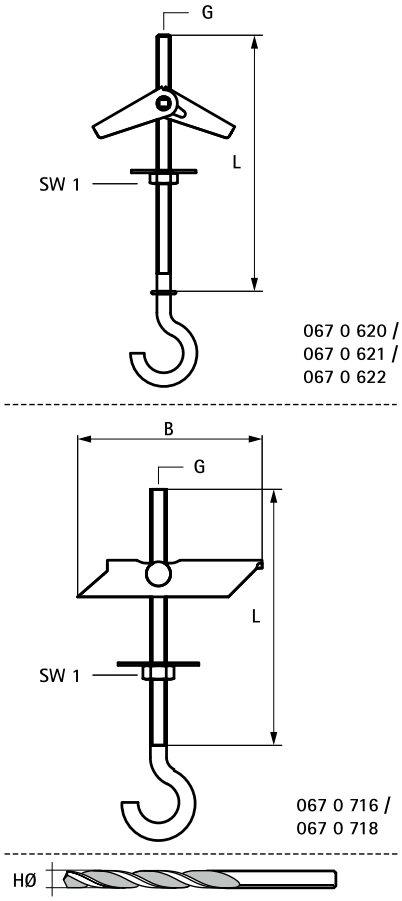
The loading values of the plug depend on the surface (commonly trapezium sheet, loading capacity per m² determining).