walraven

# BIS Slide Nut 651

(G 30 10)

fixing to BIS RapidRail®

## Features and benefits

- suitable for rail 27x18, 30x15, 30x20, 30x30, 30x45, 38x40
- Part No. 65130XX: because of shape the nut fits in rail
- Part No. 65190XX: narrowing fits in slot of rail (locking against revolving in the same direction)
- material: steel
- zinc plated

| Part No. | Type | G | $T_{(inst.)}$ (Nm) | For Rail | $F_{a,z}$ (N) | Pack 1 | Pack 2 |
|---|---|---|---|---|---|---|---|
| 6513006 | 651A | M6 | 7.5 | 27x18, 30x15, 30x20, 30x30, 30x45 | - | 100 | 2,000 |
| 6513008 | 651A | M8 | 10.0 | 27x18, 30x15, 30x20, 30x30, 30x45 | - | 100 | 2,000 |
| 6513010 | 651A | M10 | 10.0 | 27x18, 30x15, 30x20, 30x30, 30x45 | - | 100 | 2,000 |
| 6519006 | 651C | M6 | 7.5 | 27x18, 30x15, 30x20, 30x30, 30x45 | 3,100 | 50 | 1,000 |
| 6519008 | 651C | M8 | 10.0 | 27x18, 30x15, 30x20, 30x30, 30x45 | 3,100 | 50 | 2,000 |
| 6519010 | 651C | M10 | 10.0 | 27x18, 30x15, 30x20, 30x30, 30x45 | 3,100 | 50 | 1,000 |

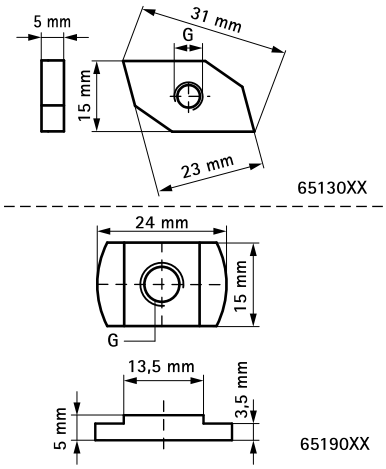


**Complementary**

Walraven RapidRail® Cantilever Arm
Walraven RapidRail® Fixing Rail

**Alternative**

BIS RapidRail® Slide Nut