diamond walraven

Walraven Yeti® 335 Support System

(I 04 10)

for Rooftop Installations

Features and benefits

- modular supporting system for HVAC equipment, solar panels, walkways, pipe work, cable runs, etc.
- for flat roofs
- for horizontal and vertical applications
- 360° rotatable insert for BIS RapidStrut® 41x41 or BIS RapidStrut® DS 5 (41x52 mm)
- with non-slip anti-vibration mat
- noise reduction according to DIN EN ISO 10140-1 and DIN EN ISO 10140-3 up to 31 dB(A)
- UV-resistance according to EN ISO 16474-3:2014-02 - certified by ITB
- mouldings made of WPC, a composite of recycled plastic and wood fibre
- resistant to UV and chemical influences
- BIS Yeti 335 H-set consisting of:
  - 2 x BIS Yeti® 335 including non-slip anti-vibration mat (made of rubber)
  - 4 x BIS Strut Connector 90°
  - 8 x hexagon head bolts and slide nuts

Nr.
1762-001-19

ITB No.
LZM00-02259

Part No.	Model	L	B (mm)	H (mm)	h (mm)	$F_{a,z}$ (N)	$M_{a,y}$ (Nm)	Pack 1	Pack 2
67685201	Vertical	335 mm	335	96	20	20,000*	200.0	1	90
67685302	H-set (without Strut Rail)	335 mm	335	-	-	20,000*	200.0	1	32
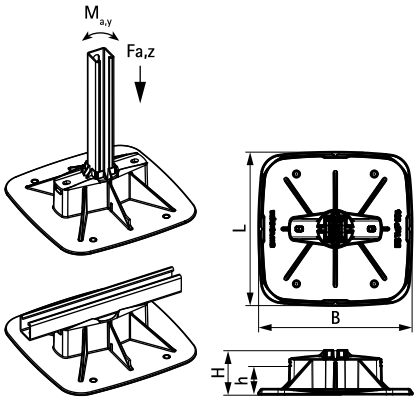
** = Max. allowed load without taking influence of insulation into account, using RapidStrut® channel type 41\|H*
For a detailed calculation and for support how to spread the load please contact Walraven Technical Support.
In cases where a foot is used in roof applications, the installer is obliged to verify maximum load capacity of roof before installation.