Walraven RapidStrut® Rail Connector 135° G2 (BUP1000)

(H 28 54)

for Metallic Strut and fabrications

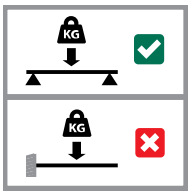

Features and benefits

- connector with pre-assembled BIS RapidStrut® Slide nut(s)
- to make fabrication with Strut Rail
- ready-to-use pre-assembled for a quick fixing, and retains assembly in place before final tightening
- 'Direct Twist' technology for easy and secure installation
- visual guide to check the position of the slide nut
- optimized for easy installation with electrical tools
- material: metal parts made of steel 1.0332; spring(s) made of POM (polyoxymethylene), green
- surface protection:
  - product is part of the Walraven BIS UltraProtect® 1000 system
  - suitable for in- and outdoor applications
  - stands min. 1,000 hours salt spray test (max. 5% red rust) according to ISO 9227

Part No.	Model	Type	a (°)	$T_{(inst.)}$ (Nm)	For Rail	Pack 1
665885235	Long / long	2 sides pre-assembled	135°	40.0	Strut	20
665885330	Short / long	1 side pre-assembled	135°	40.0	Strut	25

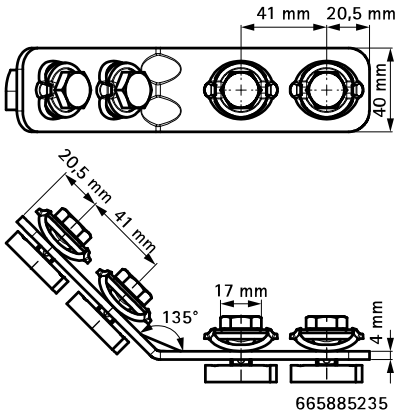

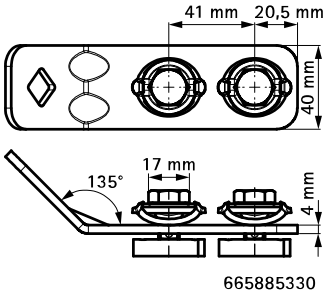

Complementary

Walraven RapidStrut® Fixing Rail DS 5 (BUP1000)