diamond walraven

Walraven Strut Rail Beam Clamp

(H 36 05)

to make Strut rail fabrications

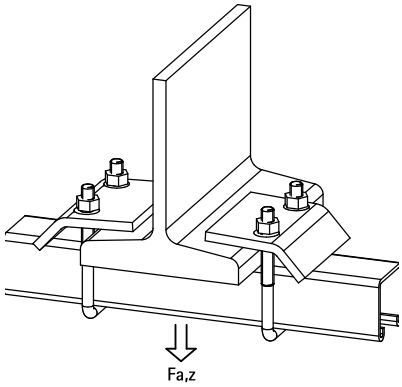

Features and benefits

- for a solid fixing to steel construction without the need for welding or drilling
- always use 2 beam clamps per fixing
- material: steel 1.0332
- hot dip galvanized

Part No.	A (mm)	G	L	B (mm)	H (mm)	b (mm)	s (mm)	Lm1 (mm)	SW1 (mm)	T_{inst} (Nm)	For Rail	$F_{a,z}$ (N)	Pack 1
66581711	17.5	M10	69 mm	80	90		5.5	60	17	15	Strut 41x21 + 41x41 + 41x21D	5,700	25
66581721	20.0	M10	69 mm	80	130	44	6.0	75	17	15	Strut 41x62 + 41x82 + 41x41D + DS 5 (41 x 51)	5,700	25
Also available in stainless steel 1.4401 (AISI 316).													

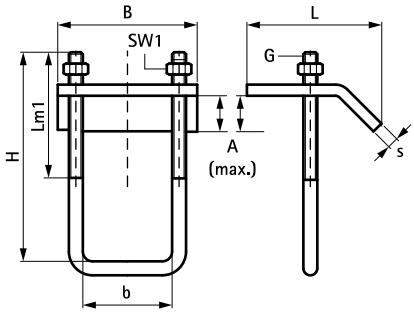

Complementary

Walraven RapidStrut® Fixing Rail (pg)
Walraven RapidStrut® Fixing Rail DS 5 (BUP1000)
Walraven RapidStrut® Fixing Rail Double (pg)

Alternative

Walraven Strut 'Heavy Duty' Beam Clamp

EN-DUB 10/2024- Subject to modifications