# Walraven VibraTek® SB-FF Silentblock

*(L2 05 66)*

a rubber silentblock with two internal threads

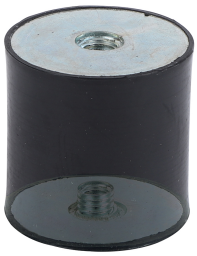

## Features and benefits

- a universal rubber absorber, ideal for use with all kinds of elastic suspension or mounting of equipment
- ideal for use with machinery and equipment mounted on metallic surface
- for use in compression only
- SB-FF with two internal threads
- working temperature range -20 ˚C till 90 ˚C
- available in four configurations: (1) SB-MM with two external threads, (2) SB-MF with one external and one internal thread, (3) SB-FF with two internal threads, and (4) SB-M with one external thread and a rubber base

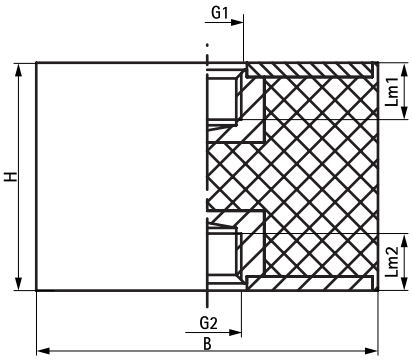


| Part No. | B (mm) | H (mm) | G1 | G2 | Lm1 (mm) | Lm2 (mm) | Max. Optimal Load (N) | Max. Deflection (mm) | Pack 1 |
|---|---|---|---|---|---|---|---|---|---|
| 2801600181 | 20 | 20 | M8 | M8 | 6 | 6 | 180 | 2.0 | 100 |
| 2801600291 | 25 | 20 | M8 | M8 | 6 | 6 | 290 | 2.0 | 100 |
| 2801600420 | 30 | 25 | M8 | M8 | 7 | 7 | 420 | 2.5 | 100 |
| 2801600750 | 40 | 40 | M8 | M8 | 7 | 7 | 750 | 4.0 | 100 |
| 2801601170 | 50 | 40 | M10 | M10 | 7 | 7 | 1,170 | 4.0 | 50 |
| 2801601690 | 60 | 40 | M12 | M12 | 10 | 10 | 1,690 | 4.0 | 100 |