Walraven VibraTek® SA-W Silent Washer

(L2 05 57)

silent rubber washer for isolating metal to metal contact

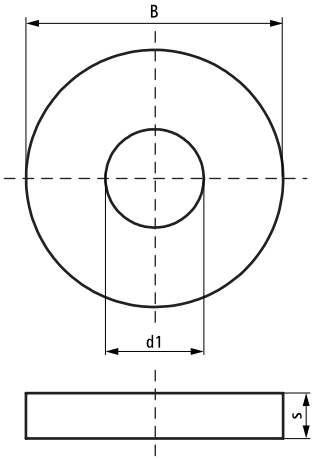

Features and benefits

- viscoelastic rubber washers that cushion and prevent transmission of vibroacoustic effects to the structure
- working temperature range -20 °C till 90 °C

Part No.	B (mm)	s (mm)	d1 (mm)	Pack 1	Pack 2
2801306503	17	3	6.5	200	1,000
2801308504	25	4	8.5	200	1,000
2801308508	25	8	8.5	100	500
2801310505	25	5	10.5	200	1,000
2801312506	30	5	12.5	100	500
2801316515	50	15	16.5	20	100