walraven

Walraven VibraTek® MR-L 1000/M8

Rubber Levelling Mount

(L2 05 18)

rubber mount with M8 connection for equipment isolation and levelling

Features and benefits

- recommended for machinery with working speeds above 2500 RPM, providing a degree of vibration insulation from 75% to 80%
- simple to install and does not need to be fixed to the supporting structure
- working temperature range -20 ˚C till 90 ˚C
- rubber isolator with DIN 934 nuts and DIN 9012 washers included in delivery for mounting and levelling equipment
- metal and rubber parts can be separated for recycling
- hardness 45 shore A

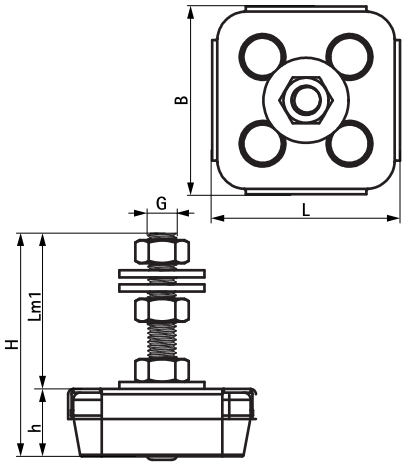

Part No.	G	L	B (mm)	H (mm)	h (mm)	Lm1 (mm)	Min. Load (N)	Max. Load (N)	Min. Optimal Load (N)	Max. Optimal Load (N)	Max. Deflection (mm)	Pack 1
2800101000	M8	53 mm	53	63	19	44	50	1,000	100	800	4.0	100
See Product Data Sheet for further technical information.												