Walraven Strut 'Heavy Duty' Beam Clamp

(H 36 40)

fixing to steel beam up to flange 35 mm

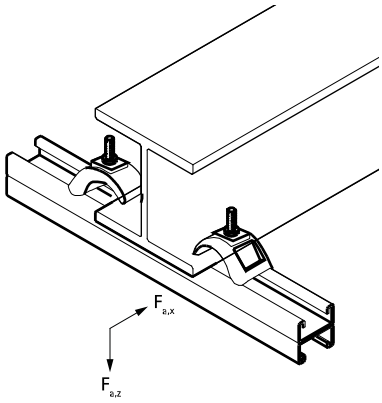

Features and benefits

- solid cast iron beam clamp for suspension of heavy loads onto beams without welding or drilling
- up to flange thickness 35 mm
- for fixing of all Strut to a steel beam
- material: steel
- hot dip galvanized

Part No.	G	L	B (mm)	H (mm)	CT_{max} (mm)	SW1 (mm)	$T_{(inst.)}$ (Nm)	For Rail	$F_{a,z}$ (N)	$F_{a,x}$ (N)	Pack 1
6072002	M10	52 mm	72	80	35	17	30.0	Strut	7.800	1,500	25
$F_{a,z}$: max. allowed load acc. RAL GZ-655 / D-3.3.											

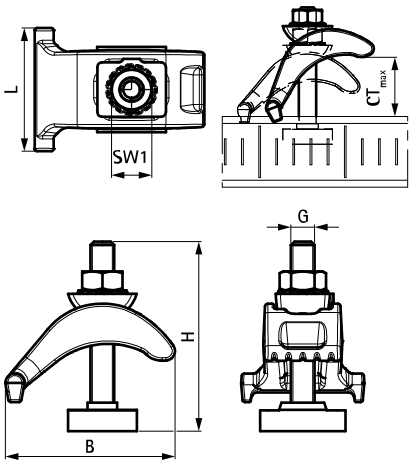

Complementary

Walraven RapidStrut® Fixing Rail (pg)
Walraven RapidStrut® Fixing Rail DS 5 (BUP1000)
Walraven RapidStrut® Fixing Rail (BUP1000)

Complementary

Walraven RapidStrut® Fixing Rail Double (pg)
Walraven RapidStrut® Fixing Rail Double (hdg)

Alternative

Walraven Strut 41x21D 'Heavy Duty' Set