walraven

Walraven RapidRail® Cross Connector

(G 35 50)

to make Walraven RapidRail® fabrications

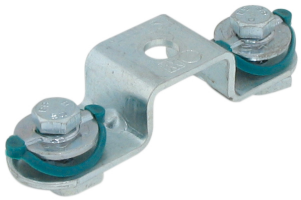

Features and benefits

- connector with pre-assembled BIS RapidRail® Slide nut(s)
- to make rail fabrications
- ready-to-use pre-assembled for a quick fixing, and retains assembly in place before final tightening
- material: metal parts made of steel 1.0332; spring(s) made of POM (polyoxymethylene), green
- zinc plated

RAL-GZ 655/D
Cert.Nr. 2012-10

Part No.	L	B (mm)	H (mm)	s (mm)	S (mm)	k (mm)	$T_{(inst.)}$ (Nm)	For Rail	$F_{a,z}$ (N)	$F_{a,x}$ (N)	RAL	Pack 1
6584150	104 mm	30	20	3.0	28	74	15.0	27x18	1,226	689	RAL[1]	25
6584151	112 mm	30	17	3.0	31	82	15.0	30x15	1,226	689	RAL[1]	25
6584152	109 mm	30	22	3.0	31	79	15.0	30x20	1,226	689	RAL[1]	25
6584153	97 mm	30	32	3.0	31	67	15.0	30x30	1,226	689	-	25
6584156	117 mm	30	42	3.0	39	87	15.0	38x40	1,226	689	-	25

RAL[1] = tested, certified and monitored by a third party according to RAL-GZ 655/D in combination with Rail 30x15, 30x30, 30x20 and 30x45.
For detailed technical information about our RAL marked products, please see the RAL datasheet in our web catalogue.

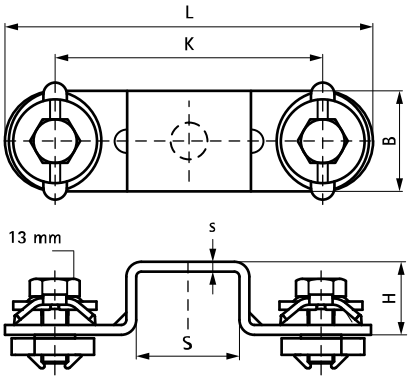

Complementary
Walraven RapidRail® Fixing Rail