Walraven RapidRail Construction Bracket (zp)

(G 20 15)

to make Walraven RapidRail® fabrications

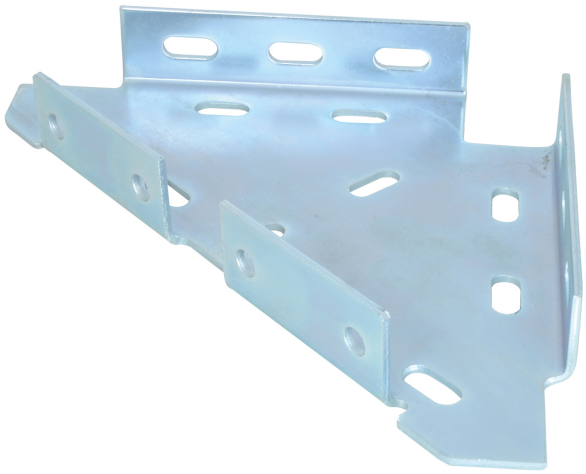

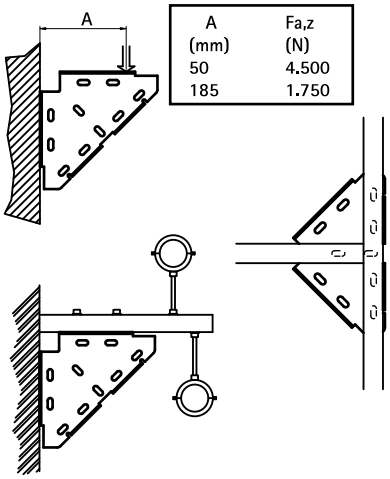

Features and benefits

- one-part support
- for fixing support under, top or on side of a cantilever arm
- also used to strengthen rail constructions
- suitable for rail 27x18, 30x15, 30x20, 30x30, 30x45
- material: steel
- zinc plated

Part No.	For Rail	Pack 1
6593010	27x18, 30x15, 30x20, 30x30, 30x45	10
Rail Junction Angle Bracket for 38x40 Rail? See Part No. 65938020 (page H 16 20).		

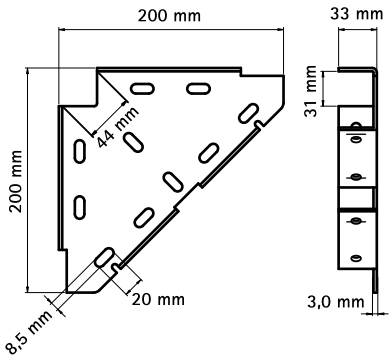

Complementary
Walraven RapidRail® Fixing Rail

Alternative
Walraven RapidRail Corner Bracket (zp)