Walraven Maxx Base Plate

(H2 05 11)

to connect Maxx profiles to wall, floor or ceilings

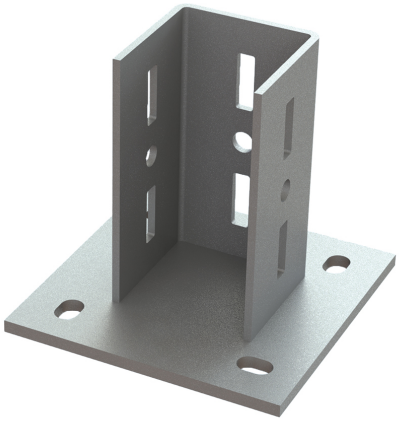

Features and benefits

- U-saddle welded on large base plate
- for connecting Maxx profiles to wall, floor or ceiling
- slots are compatible with mounting profiles
- CO_2 welded
- material: base plate made of steel (type S275); U-part made of steel (type S235)
- hot dip galvanized

Part No.	Type	L	B (mm)	H (mm)	h (mm)	s (mm)	d1 (mm)	d2 (mm)	S (mm)	k (mm)	k1 (mm)	Pack 1
6581818	BP80	185 mm	185	210	80	10.0	25 x 14	45 x 14	81	130	130	-
6581820	BP100	220 mm	220	210	100	10.0	24 x 18	45 x 14	101	160	160	-
6581821	BP120	240 mm	220	210	120	10.0	24 x 18	45 x 14	101	160	180	-

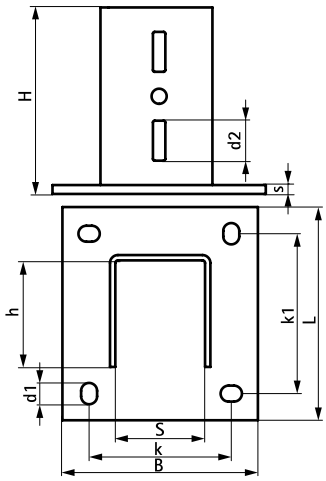

Complementary

Walraven Maxx Heavy Rail Profile
Walraven Maxx Hammerfix