Walraven Adjustable Support (BUP1000)

(H 12 53)

fixing to wall

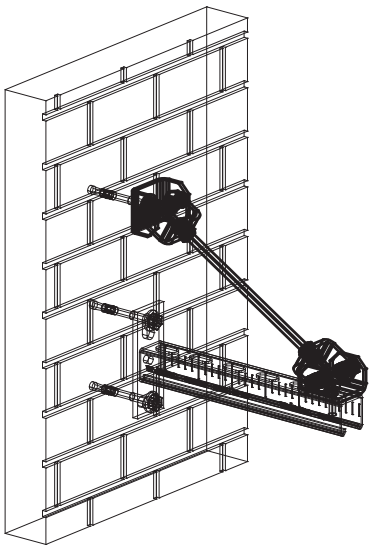

Features and benefits

- especially for angled installations with bracings
- suitable for fixing to walls or fixing rails
- adjustable angle up to 90°
- with two holes Ø13 mm
- material: steel
- surface protection:
  - product is part of the Walraven BIS UltraProtect® 1000 system
  - suitable for in- and outdoor applications
  - stands min. 1,000 hours salt spray test (max. 5% red rust) according to ISO 9227
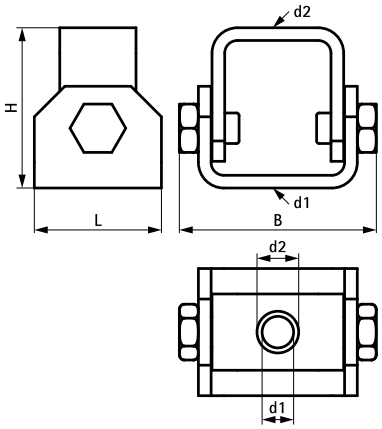
Part No.	L	B (mm)	H (mm)	d1 (mm)	d2 (mm)	For Rail	$F_{a,z}$ (N)	ST	Pack 1
66588818	50 mm	78	63	Ø 13.0	Ø 13.0	Strut	5,000	BIS UltraProtect® 1000	10
Max. allowed load: when used at an angle of 45° on wall/ceiling.