walraven

# WCA1 Ceiling Anchor

(L 03 80)

economical ceiling hammer-set anchor

## Features and benefits

- through-fixing
- simple and quick installation procedure
- correct anchor installation can be verified by simple visual check
- medium load capacity
- material: steel
- zinc plated
- ETA ETAG001 Part 6 approval for multiple use for non-structural applications
- fire resistance class R30-R120 for design of anchorages under exposure to fire
- substrate type:
  - cracked concrete
  - non-cracked concrete

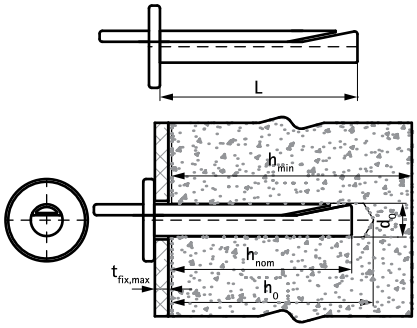


| Part No. | Code | Size | L | $d_0$ (mm) | $h_0$ (mm) | $h_{min}$ (mm) | $h_{nom}$ (mm) | $t_{fix,max}$ (mm) | Rec. Tension Load C20/25 Concrete (kN) | Pack 1 | Pack 2 |
|---|---|---|---|---|---|---|---|---|---|---|---|
| 60963604 | WCA1 6x40 | 6 | 36 mm | 6 | ≥ 40 | 100 | ≥ 32 | 4.5 | 1.43* | 100 | 1,600 |
| 60963665 | WCA1 6x65 | 6 | 65 mm | 6 | ≥ 40 | 100 | ≥ 32 | 35.0 | 1.43* | 100 | 800 |

** Recommended loads: are stated for multiple use for non-structural applications according to ETAG001, Part 6; apply to anchors correctly installed at maximum embedment depth; include partial safety factor and an overall partial safety factor for action of 1.4.*
*The partial safety factor for action depends on the type of loading and shall be taken from national regulations. All anchor failure modes and the entire relevant product European Technical Assessment must be considered for anchor design.*
*For more information, please refer to the ETA report.*

**Complementary**

WSDS+ 3CE Concrete Drill Bit