walraven

Britclips® PC Flange 8-12 mm

(J 20 06)

for flange 8 - 12 mm

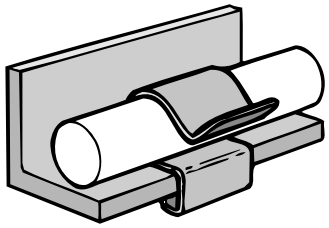

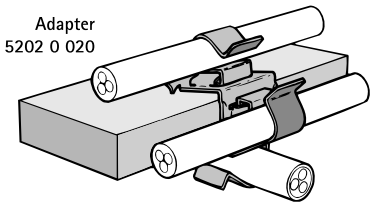

Features and benefits

- for quick fixing of cables
- Part No. 52020020: adaptor for fastening of maximum 3 cable run clips (type PC4)
- material: spring steel (type CS70)
- surface treatment: Delta-Tone 9000 (480 hours)

Part No.	Code	D (mm)	A (mm)	Pack 1	Pack 2
52021112	PC12 11	10,0 - 11,0	8 - 12	100	500
52021412	PC12 14	12,0 - 14,0	8 - 12	100	500
52021812	PC12 18	15,0 - 18,0	8 - 12	100	500
52022412	PC12 24	19,0 - 24,0	8 - 12	100	500
52023012	PC12 30	25,0 - 30,0	8 - 12	100	500
52020020	PCC	0	12 - 20	50	200
For use with static loads only.					

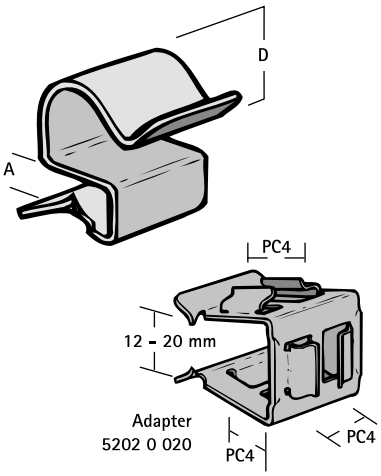

Alternative
Britclips® GAM8