Britclips® FCHR M6 x 11

(J 05 30)

for flange 5 - 16 mm

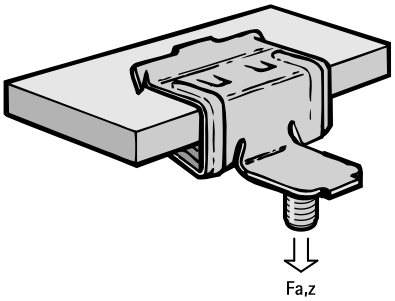

Features and benefits

- for a solid fixing to steel construction without the need for welding or drilling
- with stud bolt M6 x 11 mm for fixing of clamp, conduit junction box, etc.
- material: spring steel (type CS70)
- surface treatment: Delta-Tone 9000 (480 hours)

Part No.	Code	A (mm)	$F_{a,z}$ (N)	Pack 1	Pack 2
50521616	FCHR14 M6x11	8 - 14	200	100	400
For use with static loads only.					

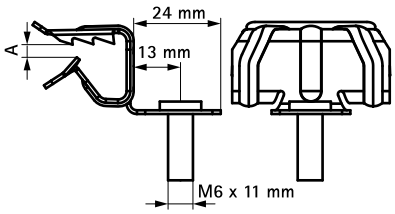

Complementary

starQuick® Clamp (Grey)